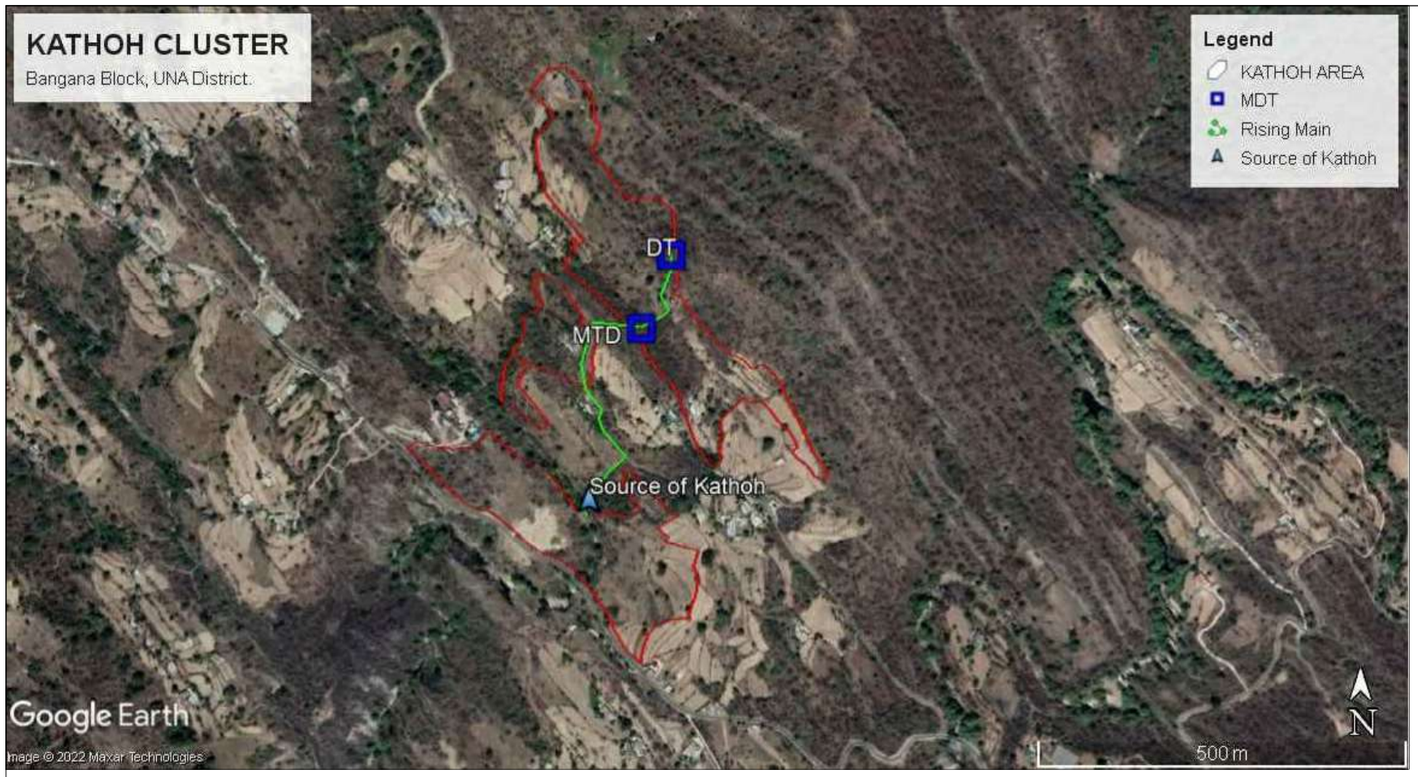

NORTH

Legend:-

1. Proposed
2. Source
3. MDT Main Distribution Tank
4. MT Modular Tank

KEY PLAN

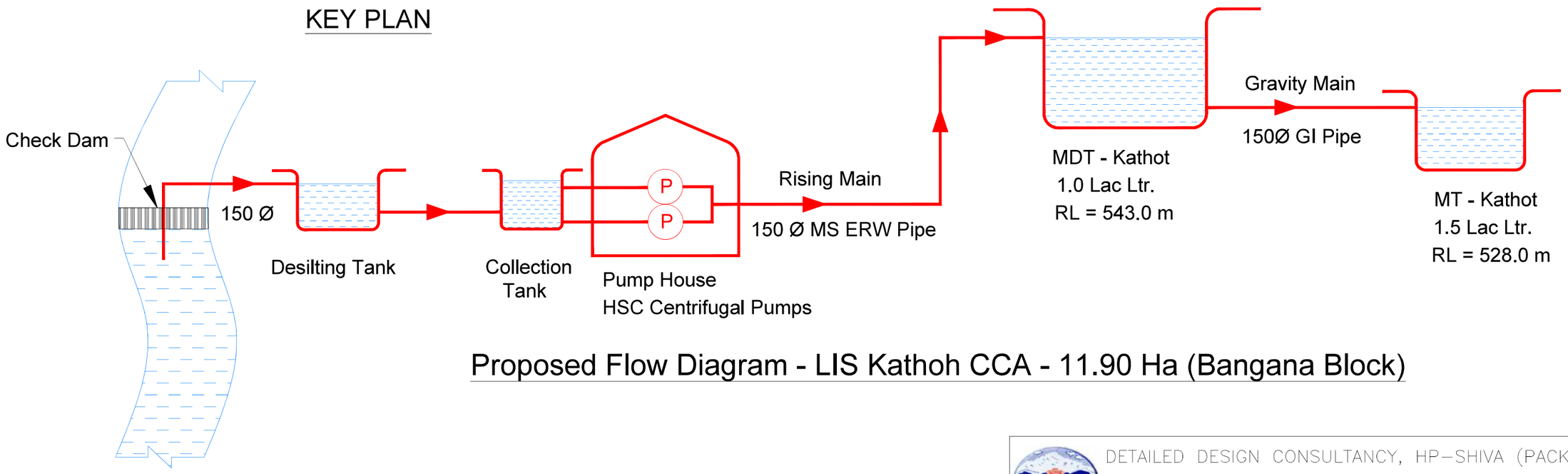

Proposed Flow Diagram - LIS Kathoh CCA - 11.90 Ha (Bangana Block)

	SIGN.													
	INITIALS													
	REVISIONS													
P0	SIGN.													16-04-2022
	INITIALS	BSN	DG	DVB							MK	DK		
	REVISIONS													
ISSUE		DRN	DSN	CHD	CV	EL	IC	ME			PE/PM	APPD	DATE (dd-mm-yyyy)	
					CLEARED									

'P' (PRELIMINARY) ISSUES ARE NOT TO BE USED FOR CONSTRUCTION / FABRICATION BUT ARE ISSUED FOR LIMITED PURPOSES ONLY AS INDICATED IN THE SMALL BLOCK ABOVE THIS BLOCK.

CONSTRUCTION / FABRICATION WORK IS PERMITTED ON 'R' (RELEASED) ISSUES ONLY.

INFORMATION CONTAINED WITHIN 'HOLD' IS NOT RELEASED FOR CONSTUCTION / FABRICATION. FIELD MUST GET DESIGN OFFICE TO CLEAR 'HOLDS' IN TIME BEFORE PROCEEDING WITH ANY CONSTRUCTION/ FABRICATION WORK RELATED TO 'HOLDS'.

SIGN. OF CLIENT:-

JE	AE	EE	SE

PURPOSE: FOR TENDER ONLY

DO NOT SCALE

Proprietary Notice and Version Control This document contains confidential information for use only by the ' Client ' ; for the Project under consideration, which is provided for the sole purpose of permitting the recipient to evaluate the information submitted herewith. In consideration of receipt of this document; unless agreed to in contrary in the Contract; the recipient agrees to maintain such information in confidence and to not reproduce or otherwise disclose this information to any person outside the recipient's organisation; except that there is no obligation to maintain the confidentiality of any information which was known to the recipient prior to receipt of such information from Tata Consulting Engineers Limited, or becomes publicly known through no fault of recipient, or Tata Consulting Engineers Limited, or is received without obligation of confidentiality from a third party owing no obligation of confidentiality to Tata Consulting Engineers Limited. All information given under this version over rides all and any kind of offers, assumptions, deliverables and contracts submitted verbally (and subsequently communicated in writing) or in writing or otherwise given under any and all previous version/s.

FILE NAME 12503A-CV-30051-Rev-P0

DETAILED DESIGN CONSULTANCY, HP-SHIVA (PACKAGE CS09)

IRRIGATION, HORTICULTURE, ORCHARDS AND VALUE CHAIN DEVELOPMENT

FLOW DIAGRAM OF PROPOSED LIS KATHOH
BANGANA BLOCK, UNA DISTRICT

TATA CONSULTING ENGINEERS LIMITED
MUMBAI

SCALE : NTS	DWG NO. TCE.12503A-CV-3082-FD-30051	ISSUE P0
DC & DISC: DEL-CV		

NORTH

Legend:-

1. Proposed
2. Source
3. MDT — Main Distribution Tank
4. MT — Modular Tank

KEY PLAN

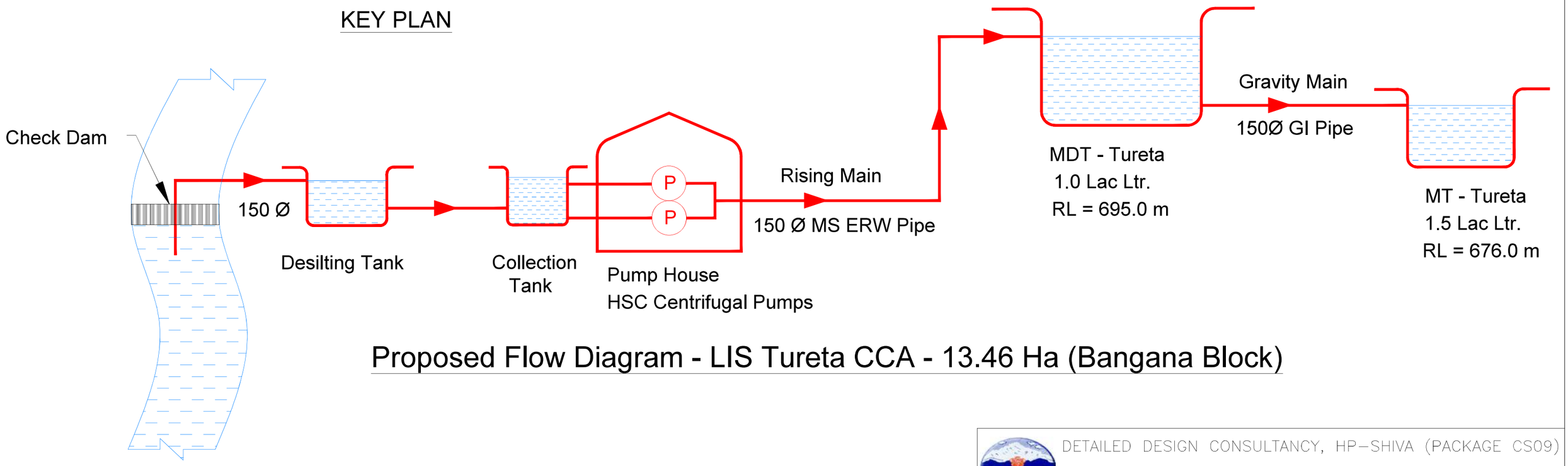

Proposed Flow Diagram - LIS Tureta CCA - 13.46 Ha (Bangana Block)

	SIGN.													
	INITIALS													
	REVISIONS													
P0	SIGN.													16-04-2022
	INITIALS	BSN	DG	DVB							MK	DK		
	REVISIONS													
ISSUE		DRN	DSN	CHD	CV	EL	IC	ME			PE/PM	APPD	DATE (dd-mm-yyyy)	
					CLEARED									

'P' (PRELIMINARY) ISSUES ARE NOT TO BE USED FOR CONSTRUCTION / FABRICATION BUT ARE ISSUED FOR LIMITED PURPOSES ONLY AS INDICATED IN THE SMALL BLOCK ABOVE THIS BLOCK.

CONSTRUCTION / FABRICATION WORK IS PERMITTED ON 'R' (RELEASED) ISSUES ONLY.

INFORMATION CONTAINED WITHIN 'HOLD' IS NOT RELEASED FOR CONSTUCTION / FABRICATION. FIELD MUST GET DESIGN OFFICE TO CLEAR 'HOLDS' IN TIME BEFORE PROCEEDING WITH ANY CONSTRUCTION/ FABRICATION WORK RELATED TO 'HOLDS'.

SIGN. OF CLIENT:-

JE	AE	EE	SE

PURPOSE: FOR TENDER ONLY

DO NOT SCALE

Proprietary Notice and Version Control This document contains confidential information for use only by the "Client"; for the Project under consideration, which is provided for the sole purpose of permitting the recipient to evaluate the information submitted herewith. In consideration of receipt of this document; unless agreed to in contrary in the Contract; the recipient agrees to maintain such information in confidence and to not reproduce or otherwise disclose this information to any person outside the recipient's organisation; except that there is no obligation to maintain the confidentiality of any information which was known to the recipient prior to receipt of such information from Tata Consulting Engineers Limited, or becomes publicly known through no fault of recipient, or Tata Consulting Engineers Limited, or is received without obligation of confidentiality from a third party owing no obligation of confidentiality to Tata Consulting Engineers Limited. All information given under this version over rides all and any kind of offers, assumptions, deliverables and contracts submitted verbally (and subsequently communicated in writing) or in writing or otherwise given under any and all previous version/s.

FILE NAME 12503A-CV-30052-Rev-P0

DETAILED DESIGN CONSULTANCY, HP-SHIVA (PACKAGE CS09)

IRRIGATION, HORTICULTURE, ORCHARDS AND VALUE CHAIN DEVELOPMENT

FLOW DIAGRAM OF PROPOSED LIS TURETA
BANGANA BLOCK, UNA DISTRICT

TATA CONSULTING ENGINEERS LIMITED
MUMBAI

SCALE : NTS
DC & DISC: DEL-CV

DWG NO. TCE.12503A-CV-3082-FD-30052

ISSUE P0

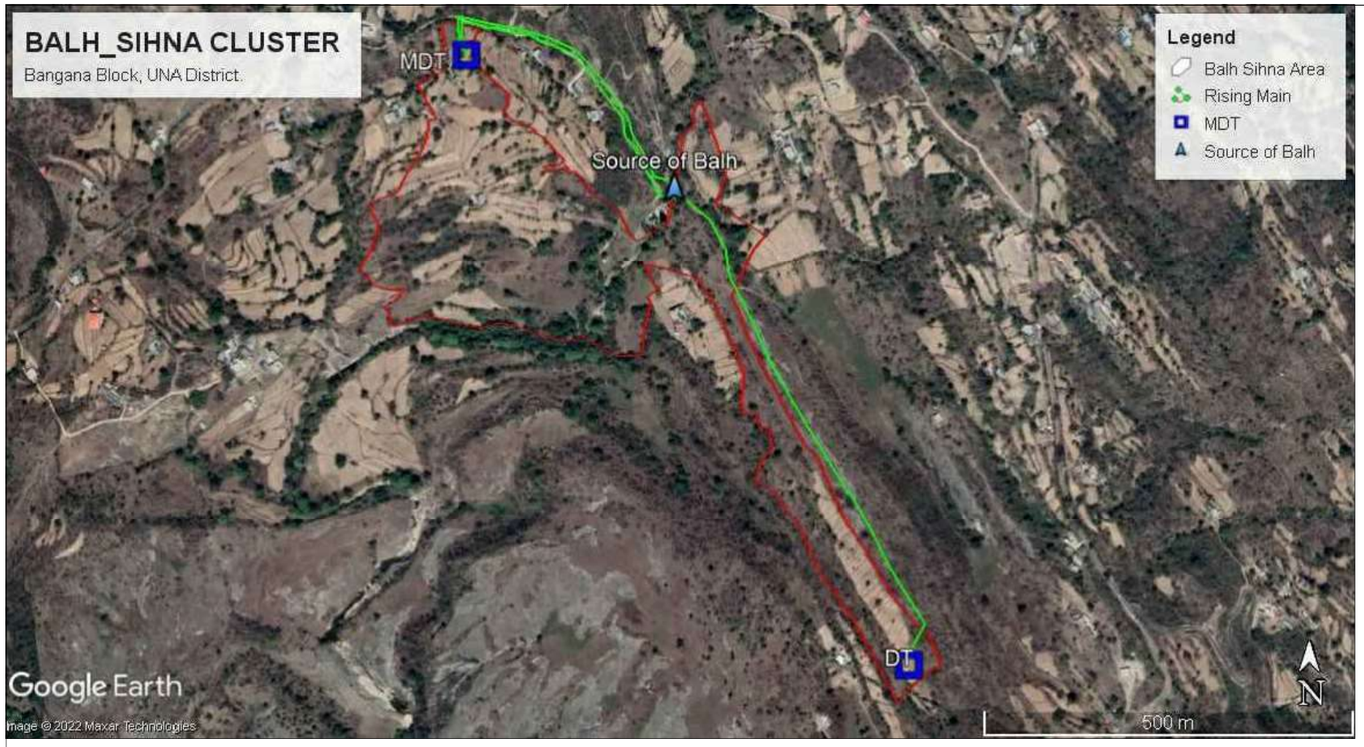

NORTH

Legend:-

1. Proposed
2. Source
3. MDT — Main Distribution Tank
4. MT — Modular Tank

KEY PLAN

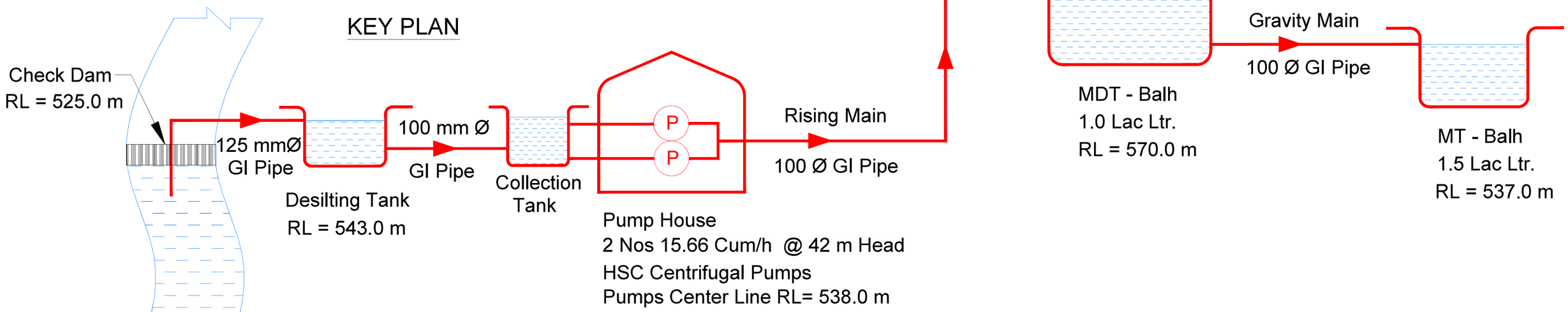

Proposed Flow Diagram - LIS Balh CCA - 21.90 Ha (Bangana Block)

P1	SIGN.													27-05-2022
	INITIALS	BSN	DG	DVB							MK	DK		
	REVISIONS	AS PER CLIENT REQUIREMENT												
P0	SIGN.													16-04-2022
	INITIALS	BSN	DG	DVB							MK	DK		
	REVISIONS													
ISSUE		DRN	DSN	CHD	CV	EL	IC	ME			PE/PM	APPD	DATE (dd-mm-yyyy)	
					CLEARED									

'P' (PRELIMINARY) ISSUES ARE NOT TO BE USED FOR CONSTRUCTION / FABRICATION BUT ARE ISSUED FOR LIMITED PURPOSES ONLY AS INDICATED IN THE SMALL BLOCK ABOVE THIS BLOCK.

CONSTRUCTION / FABRICATION WORK IS PERMITTED ON 'R' (RELEASED) ISSUES ONLY.

INFORMATION CONTAINED WITHIN 'HOLD' IS NOT RELEASED FOR CONSTUCTION / FABRICATION. FIELD MUST GET DESIGN OFFICE TO CLEAR 'HOLDS' IN TIME BEFORE PROCEEDING WITH ANY CONSTRUCTION/ FABRICATION WORK RELATED TO 'HOLDS'.

SIGN. OF CLIENT:–

JE	AE	EE	SE

PURPOSE: FOR TENDER ONLY

DO NOT SCALE

Proprietary Notice and Version Control This document contains confidential information for use only by the " Client " ; for the Project under consideration, which is provided for the sole purpose of permitting the recipient to evaluate the information submitted herewith. In consideration of receipt of this document; unless agreed to in contrary in the Contract; the recipient agrees to maintain such information in confidence and to not reproduce or otherwise disclose this information to any person outside the recipient's organisation; except that there is no obligation to maintain the confidentiality of any information which was known to the recipient prior to receipt of such information from Tata Consulting Engineers Limited, or becomes publicly known through no fault of recipient, or Tata Consulting Engineers Limited, or is received without obligation of confidentiality from a third party owing no obligation of confidentiality to Tata Consulting Engineers Limited. All information given under this version over rides all and any kind of offers, assumptions, deliverables and contracts submitted verbally (and subsequently communicated in writing) or in writing or otherwise given under any and all previous version/s.

FILE NAME 12503A–CV–30053–Rev–P1

DETAILED DESIGN CONSULTANCY, HP–SHIVA (PACKAGE CS09)

IRRIGATION, HORTICULTURE, ORCHARDS AND VALUE CHAIN DEVELOPMENT

FLOW DIAGRAM OF PROPOSED LIS BALH
BANGANA BLOCK, UNA DISTRICT

TATA CONSULTING ENGINEERS LIMITED
MUMBAI

SCALE : NTS	DWG NO. TCE.12503A–CV–3082–FD–30053		ISSUE P1
DC & DISC: DEL–CV			

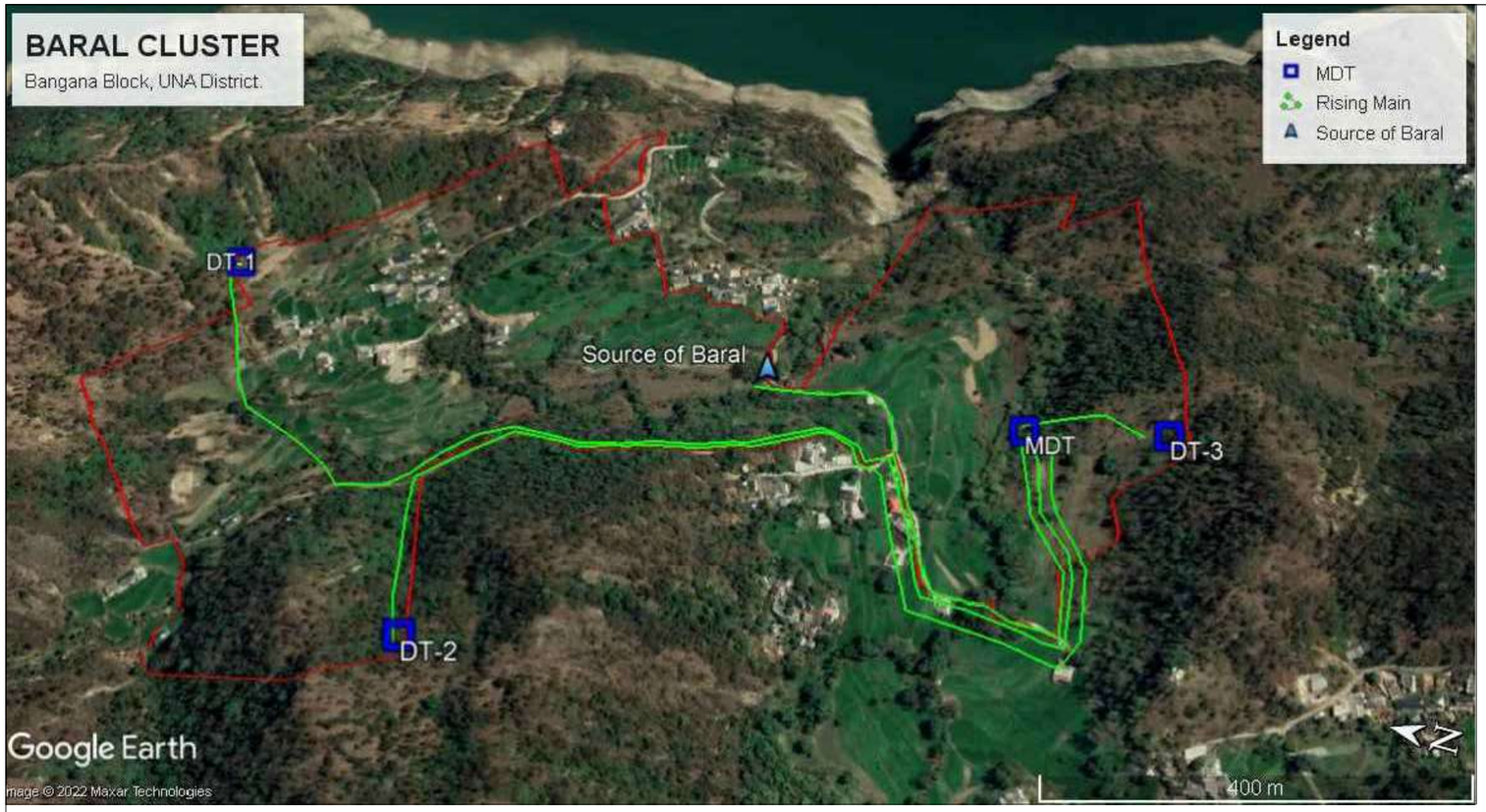

NORTH

Legend:-

1. Proposed
2. Source
3. MDT — Main Distribution Tank
4. MT — Modular Tank

KEY PLAN

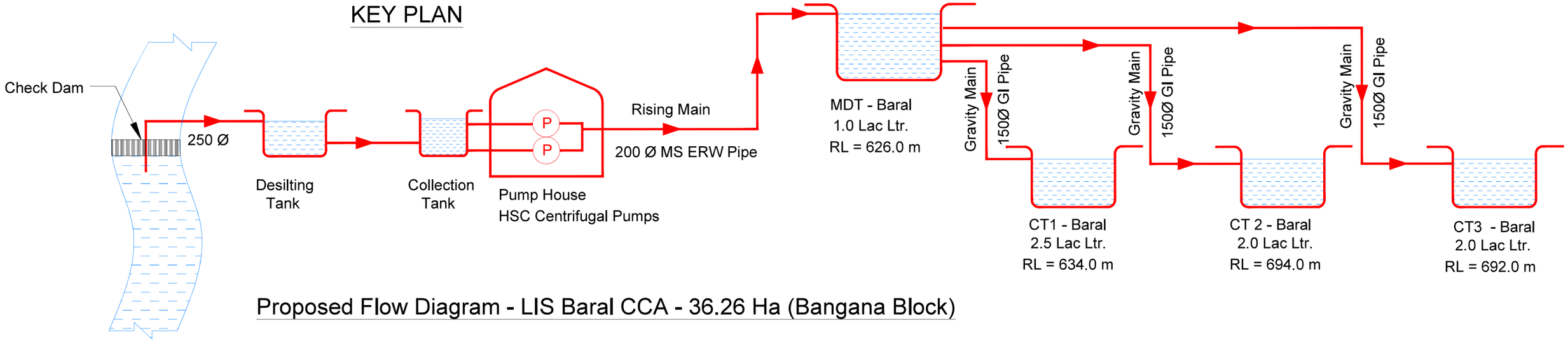

Proposed Flow Diagram - LIS Baral CCA - 36.26 Ha (Bangana Block)

	SIGN.												
	INITIALS												
	REVISIONS												
P0	SIGN.												16-04-2022
	INITIALS	BSN	DG	DVB							MK	DK	
	REVISIONS												
ISSUE		DRN	DSN	CHD	CV	EL	IC	ME			PE/PM	APPD	DATE (dd-mm-yyyy)
					CLEARED								

'P' (PRELIMINARY) ISSUES ARE NOT TO BE USED FOR CONSTRUCTION / FABRICATION BUT ARE ISSUED FOR LIMITED PURPOSES ONLY AS INDICATED IN THE SMALL BLOCK ABOVE THIS BLOCK.

CONSTRUCTION / FABRICATION WORK IS PERMITTED ON 'R' (RELEASED) ISSUES ONLY.

INFORMATION CONTAINED WITHIN 'HOLD' IS NOT RELEASED FOR CONSTUCTION / FABRICATION. FIELD MUST GET DESIGN OFFICE TO CLEAR 'HOLDS' IN TIME BEFORE PROCEEDING WITH ANY CONSTRUCTION/ FABRICATION WORK RELATED TO 'HOLDS'.

SIGN. OF CLIENT:–

JE	AE	EE	SE

PURPOSE: FOR TENDER ONLY

DO NOT SCALE

Proprietary Notice and Version Control This document contains confidential information for use only by the " Client " ; for the Project under consideration, which is provided for the sole purpose of permitting the recipient to evaluate the information submitted herewith. In consideration of receipt of this document; unless agreed to in contrary in the Contract; the recipient agrees to maintain such information in confidence and to not reproduce or otherwise disclose this information to any person outside the recipient's organisation; except that there is no obligation to maintain the confidentiality of any information which was known to the recipient prior to receipt of such information from Tata Consulting Engineers Limited, or becomes publicly known through no fault of recipient, or Tata Consulting Engineers Limited, or is received without obligation of confidentiality from a third party owing no obligation of confidentiality to Tata Consulting Engineers Limited. All information given under this version over rides all and any kind of offers, assumptions, deliverables and contracts submitted verbally (and subsequently communicated in writing) or in writing or otherwise given under any and all previous version/s.

FILE NAME 12503A–CV–30054–Rev–P0

DETAILED DESIGN CONSULTANCY, HP–SHIVA (PACKAGE CS09)

IRRIGATION, HORTICULTURE, ORCHARDS AND VALUE CHAIN DEVELOPMENT

FLOW DIAGRAM OF PROPOSED LIS BARAL
BANGANA BLOCK, UNA DISTRICT

TATA CONSULTING ENGINEERS LIMITED
MUMBAI

SCALE : NTS	DWG NO. TCE.12503A–CV–3082–FD–30054	ISSUE P0
DC & DISC: DEL–CV		

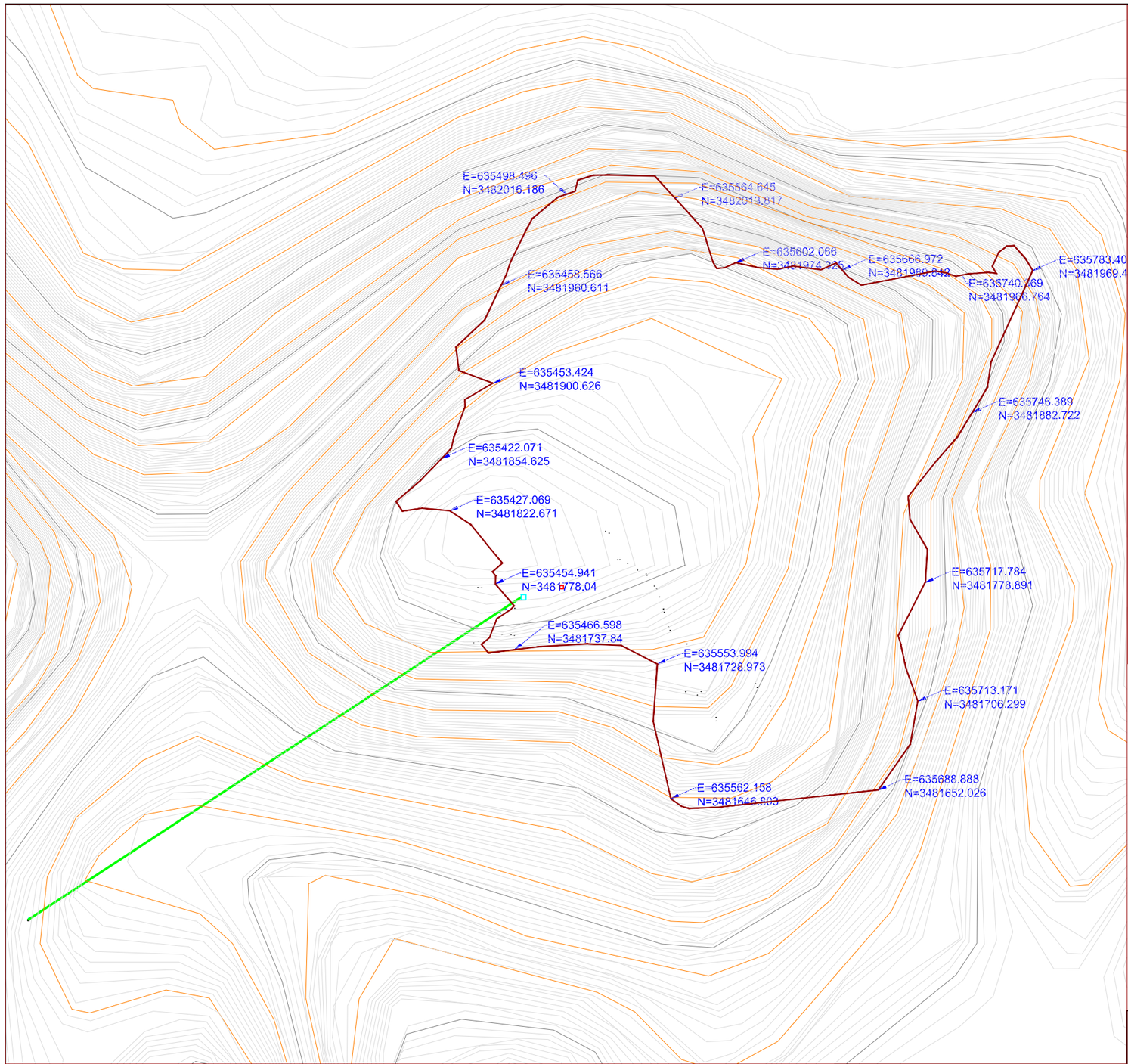

DOBAD

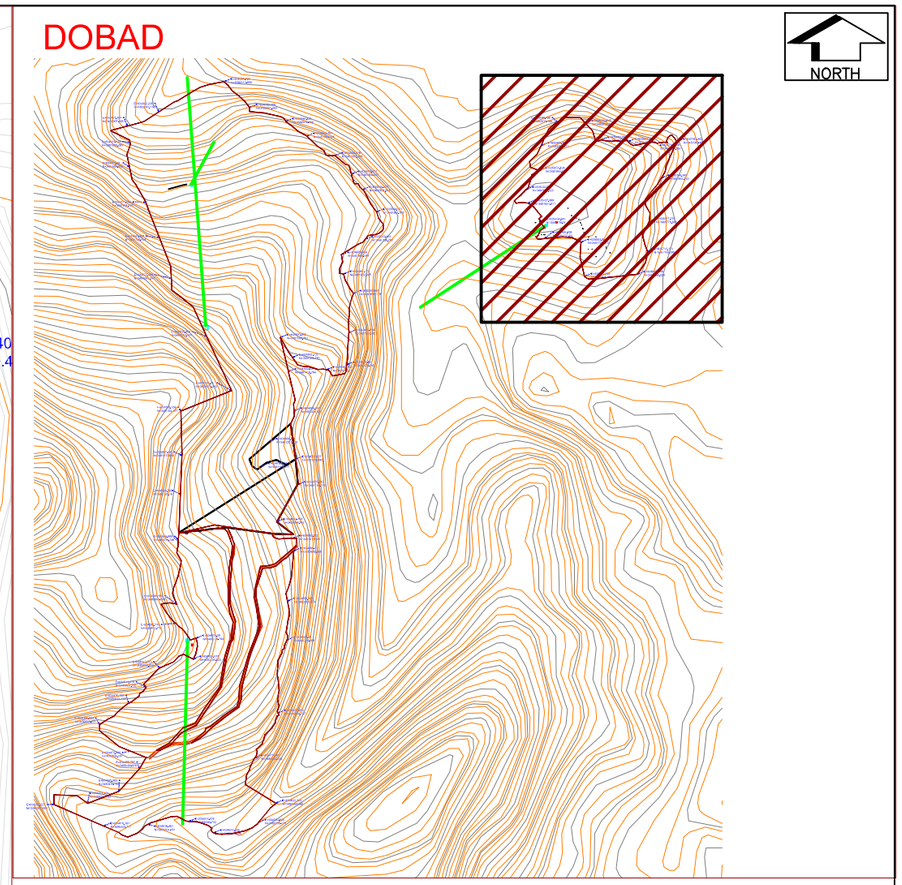

KEY PLAN

LEGEND:-

1. BOUNDRY WALL
2. BUILDING
3. HDPE WATER OUTLET PIPE
4. WATER INLET PIPE
5. OVERFLOW WATER PIPE
6. TREE
7. FLD
8. BENCH MARK / TBM. — TBM 580.000
9. WATER FLOW

DETAILED DESIGN CONSULTANCY, HP–SHIVA (PACKAGE CS09)

IRRIGATION, HORTICULTURE, ORCHARDS AND VALUE CHAIN DEVELOPMENT

TOPOGRAPHICAL SURVEY OF DOBAD CLUSTER
BANGANA BLOCK, UNA DISTRICT

SIGN. OF CLIENT:–

JE	AE	EE	SE

	SIGN.													
	INITIALS													
	REVISIONS													
P0	SIGN.													
	INITIALS	KL	DVP	DVP							NMS	NMS	08–02–2022	
	REVISIONS													
ISSUE		DRN	DSN	CHD	CV	EL	IC	ME			PE/PM	APPD	DATE (dd–mm–yyyy)	
					CLEARED									

'P' (PRELIMINARY) ISSUES ARE NOT TO BE USED FOR CONSTRUCTION / FABRICATION BUT ARE ISSUED FOR LIMITED PURPOSES ONLY AS INDICATED IN THE SMALL BLOCK ABOVE THIS BLOCK.

CONSTRUCTION / FABRICATION WORK IS PERMITTED ON 'R' (RELEASED) ISSUES ONLY.

INFORMATION CONTAINED WITHIN 'HOLD' IS NOT RELEASED FOR CONSTUCTION / FABRICATION. FIELD MUST GET DESIGN OFFICE TO CLEAR 'HOLDS' IN TIME BEFORE PROCEEDING WITH ANY CONSTRUCTION/ FABRICATION WORK RELATED TO 'HOLDS'.

PURPOSE: FOR TENDER ONLY

DO NOT SCALE

Proprietary Notice and Version Control This document contains confidential information for use only by the "Client" ; for the Project under consideration, which is provided for the sole purpose of permitting the recipient to evaluate the information submitted herewith. In consideration of receipt of this document; unless agreed to in contrary in the Contract; the recipient agrees to maintain such information in confidence and to not reproduce or otherwise disclose this information to any person outside the recipient's organisation; except that there is no obligation to maintain the confidentiality of any information which was known to the recipient prior to receipt of such information from Tata Consulting Engineers Limited, or becomes publicly known through no fault of recipient, or Tata Consulting Engineers Limited, or is received without obligation of confidentiality from a third party owing no obligation of confidentiality to Tata Consulting Engineers Limited. All information given under this version over rides all and any kind of offers, assumptions, deliverables and contracts submitted verbaly (and subsequently communicated in writing) or in writing or otherwise given under any and all previous version/s.

FILE NAME 12503A–CV–30400–Rev–P0

TATA CONSULTING ENGINEERS LIMITED
MUMBAI

SCALE : NTS	DWG NO. TCE.12503A–CV–3005–LM–30400	ISSUE P0
DC & DISC: DEL–CV		

SIZE–A3

FILE NAME: F-093-Rev-R1.DWG

TCE FORM NO. 093 R1

N
W E
S

Legend

- Water Source
- Proposed Tank Dobad (555 MSL)
- Rising_Main
- Dobad_8

	SIGN.										
	INITIALS										
	REVISIONS										
P0	SIGN.										
	INITIALS	GKJ	DG	MK					MK	DK	17-04-2022
	REVISIONS										
ISSUE		DRN	DSN	CHD	CV	EL	IC	ME	PE/PM	APPD.	DATE
					CLEARED						

'P' (PRELIMINARY) ISSUES ARE NOT TO BE USED FOR CONSTRUCTION / FABRICATION BUT ARE ISSUED FOR LIMITED PURPOSES ONLY AS INDICATED IN THE SMALL BLOCK ABOVE THIS BLOCK.

CONSTRUCTION / FABRICATION WORK IS PERMITTED ON 'R' (RELEASED) ISSUES ONLY.

INFORMATION CONTAINED WITHIN 'HOLD' IS NOT RELEASED FOR CONSTUCTION / FABRICATION. FIELD MUST GET DESIGN OFFICE TO CLEAR 'HOLDS' IN TIME BEFORE PROCEEDING WITH ANY CONSTRUCTION/FABRICATION WORK RELATED TO 'HOLDS'.

SIGN. OF CLIENT:-

JE	AE	EE	SE

PURPOSE: FOR TENDER ONLY

Proprietary Notice and Version Control This document contains confidential information for use only by the " Client " ; for the Project under consideration, which is provided for the sole purpose of permitting the recipient to evaluate the information submitted here with.In consideration of receipt of this document; unless agreed to in contrary in the Contract; the recipient agrees to maintain such information in confidence and to not reproduce or otherwise disclose this information to any person outside the recipient's organisation; except that there is no obligation to maintain the confidentiality of any information which was known to the recipient prior to receipt of such information from Tata Consulting Engineers Limited, or becomes publicly known through no fault of recipient, or Tata Consulting Engineers Limited, or is received without obligation of confidentiality from a third party owing no obligation of confidentiality to Tata Consulting Engineers Limited. All information given under this version over rides all and any kind of offers, assumptions, deliverables and contracts submitted verbally (and subsequently communicated in writing) or in writing or otherwise given under any and all previous version/s.

File Name: 12503A-CV-30401-Rev-P0

DETAILED DESIGN CONSULTANCY, HP-SHIVA (PACKAGE CS09)

IRRIGATION, HORTICULTURE, ORCHARDS AND VALUE CHAIN DEVELOPMENT

TITLE:-

KEY PLAN OF DOBAD CLUSTER
BANGANA BLOCK, UNA DISTRICT.

TATACONSULTING ENGINEERS LIMITED.
MUMBAI

SCALE:- 1:2,500

DL.CEN.:- DEL-CV

DWG. No:- TCE.12503A-CV-3005-LM-30401

ISSUE:- P0

N
W E
S

Legend

- Source
- MDT
- Tank
- Pump
- Junction
- Rising_Main
- Gravity_Main
- Dobad_8

	SIGN.								
	INITIALS								
	REVISIONS								
P0	SIGN.								
	INITIALS	GKJ	DG	MK		MK	DK	19-04-2022	
	REVISIONS								
ISSUE		DRN	DSN	CHD	CV EL IC ME CLEARED	PE/PM	APPD.	DATE	

'P' (PRELIMINARY) ISSUES ARE NOT TO BE USED FOR CONSTRUCTION / FABRICATION BUT ARE ISSUED FOR LIMITED PURPOSES ONLY AS INDICATED IN THE SMALL BLOCK ABOVE THIS BLOCK.

CONSTRUCTION / FABRICATION WORK IS PERMITTED ON 'R' (RELEASED) ISSUES ONLY.

INFORMATION CONTAINED WITHIN 'HOLD' IS NOT RELEASED FOR CONSTUCTION / FABRICATION. FIELD MUST GET DESIGN OFFICE TO CLEAR 'HOLDS' IN TIME BEFORE PROCEEDING WITH ANY CONSTRUCTION/FABRICATION WORK RELATED TO 'HOLDS'.

SIGN. OF CLIENT:-

JE	AE	EE	SE

PURPOSE: FOR TENDER ONLY

Proprietary Notice and Version Control This document contains confidential information for use only by the " Client " ; for the Project under consideration, which is provided for the sole purpose of permitting the recipient to evaluate the information submitted here with.In consideration of receipt of this document; unless agreed to in contrary in the Contract; the recipient agrees to maintain such information in confidence and to not reproduce or otherwise disclose this information to any person outside the recipient's organisation; except that there is no obligation to maintain the confidentiality of any information which was known to the recipient prior to receipt of such information from Tata Consulting Engineers Limited, or becomes publicly known through no fault of recipient, or Tata Consulting Engineers Limited, or is received without obligation of confidentiality from a third party owing no obligation of confidentiality to Tata Consulting Engineers Limited. All information given under this version over rides all and any kind of offers, assumptions, deliverables and contracts submitted verbally (and subsequently communicated in writing) or in writing or otherwise given under any and all previous version/s.

File Name: 12503A-CV-30402-Rev-P0

DETAILED DESIGN CONSULTANCY, HP-SHIVA (PACKAGE CS09)

IRRIGATION, HORTICULTURE, ORCHARDS AND VALUE CHAIN DEVELOPMENT

TITLE:- NETWORK DRAWING OF LIFT IRRIGATION SCHEME FOR DOBAD CLUSTER, BANGANA BLOCK, UNA DISTRICT.

TATACONSULTING ENGINEERS LIMITED. MUMBAI

SCALE:- 1:2,500

DL.CEN.:- DEL-CV

DWG. No:- TCE.12503A-CV-3082-WS-30402

ISSUE:- P0

Legend :-

1. Ground Level
2. Rising Main
3. Junction
4. Air Valve
5. Scour Valve

Note:-
These are Tentative Arrangements. Based on Actual Site Condition size, Quantity and Location of Proposed Valves May Vary.

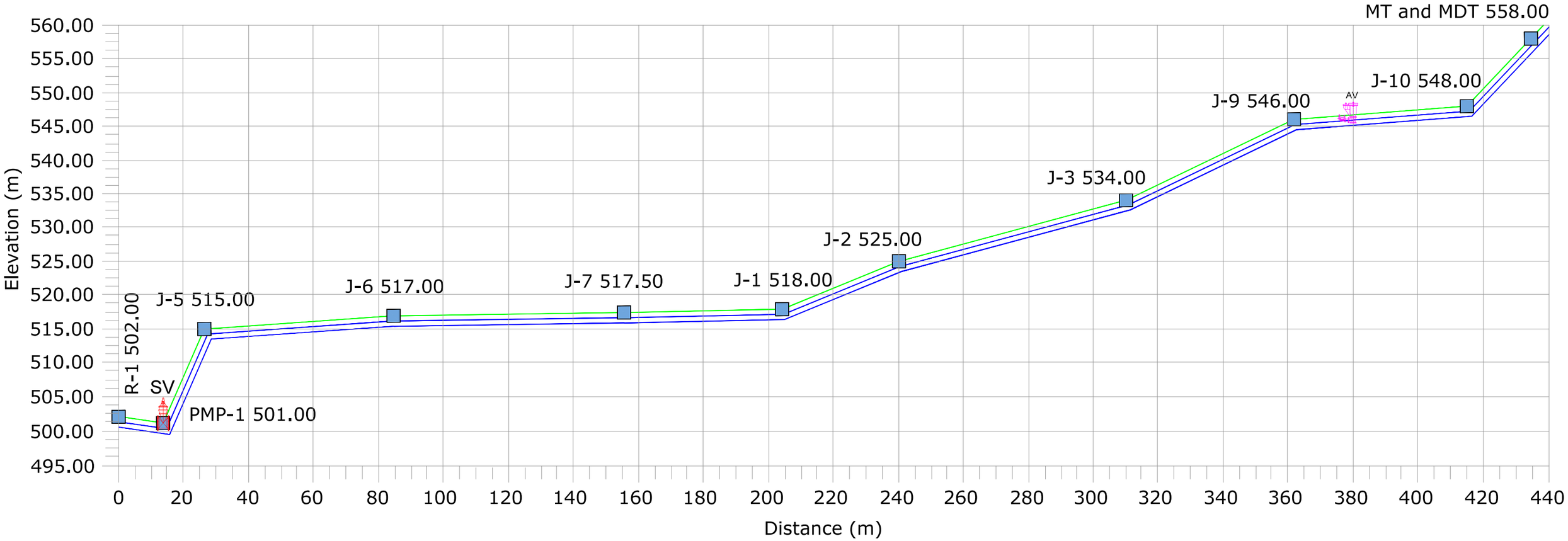

P1	SIGN.												27-05-2022
	INITIALS	BSN	DG	DVB							MK	DK	
	REVISIONS												
P0	SIGN.												16-04-2022
	INITIALS	BSN	DG	DVB							MK	DK	
	REVISIONS												
ISSUE		DRN	DSN	CHD	CV	EL	IC	ME			PE/PM	APPD	DATE (dd-mm-yyyy)
					CLEARED								

'P' (PRELIMINARY) ISSUES ARE NOT TO BE USED FOR CONSTRUCTION / FABRICATION BUT ARE ISSUED FOR LIMITED PURPOSES ONLY AS INDICATED IN THE SMALL BLOCK ABOVE THIS BLOCK.

CONSTRUCTION / FABRICATION WORK IS PERMITTED ON 'R' (RELEASED) ISSUES ONLY.

INFORMATION CONTAINED WITHIN 'HOLD' IS NOT RELEASED FOR CONSTUCTION / FABRICATION. FIELD MUST GET DESIGN OFFICE TO CLEAR 'HOLDS' IN TIME BEFORE PROCEEDING WITH ANY CONSTRUCTION/ FABRICATION WORK RELATED TO 'HOLDS'.

SIGN. OF CLIENT:-

JE	AE	EE	SE

PURPOSE: FOR TENDER ONLY

DO NOT SCALE

Proprietary Notice and Version Control This document contains confidential information for use only by the " Client " ; for the Project under consideration, which is provided for the sole purpose of permitting the recipient to evaluate the information submitted herewith. In consideration of receipt of this document; unless agreed to in contrary in the Contract; the recipient agrees to maintain such information in confidence and to not reproduce or otherwise disclose this information to any person outside the recipient's organisation; except that there is no obligation to maintain the confidentiality of any information which was known to the recipient prior to receipt of such information from Tata Consulting Engineers Limited, or becomes publicly known through no fault of recipient, or Tata Consulting Engineers Limited, or is received without obligation of confidentiality from a third party owing no obligation of confidentiality to Tata Consulting Engineers Limited. All information given under this version over rides all and any kind of offers, assumptions, deliverables and contracts submitted verbally (and subsequently communicated in writing) or in writing or otherwise given under any and all previous version/s.

FILE NAME 12503A-CV-30405-Rev-P1

DETAILED DESIGN CONSULTANCY, HP-SHIVA (PACKAGE CS09)

IRRIGATION, HORTICULTURE, ORCHARDS AND VALUE CHAIN DEVELOPMENT

PROPOSED L-SECTION FOR LIS DOBAD
BANGANA BLOCK, UNA DISTRICT

TATA CONSULTING ENGINEERS LIMITED
MUMBAI

SCALE : NTS	DWG NO. TCE-12503A-CV-3082-WS-30405		ISSUE P1
DC & DISC: DEL-CV			

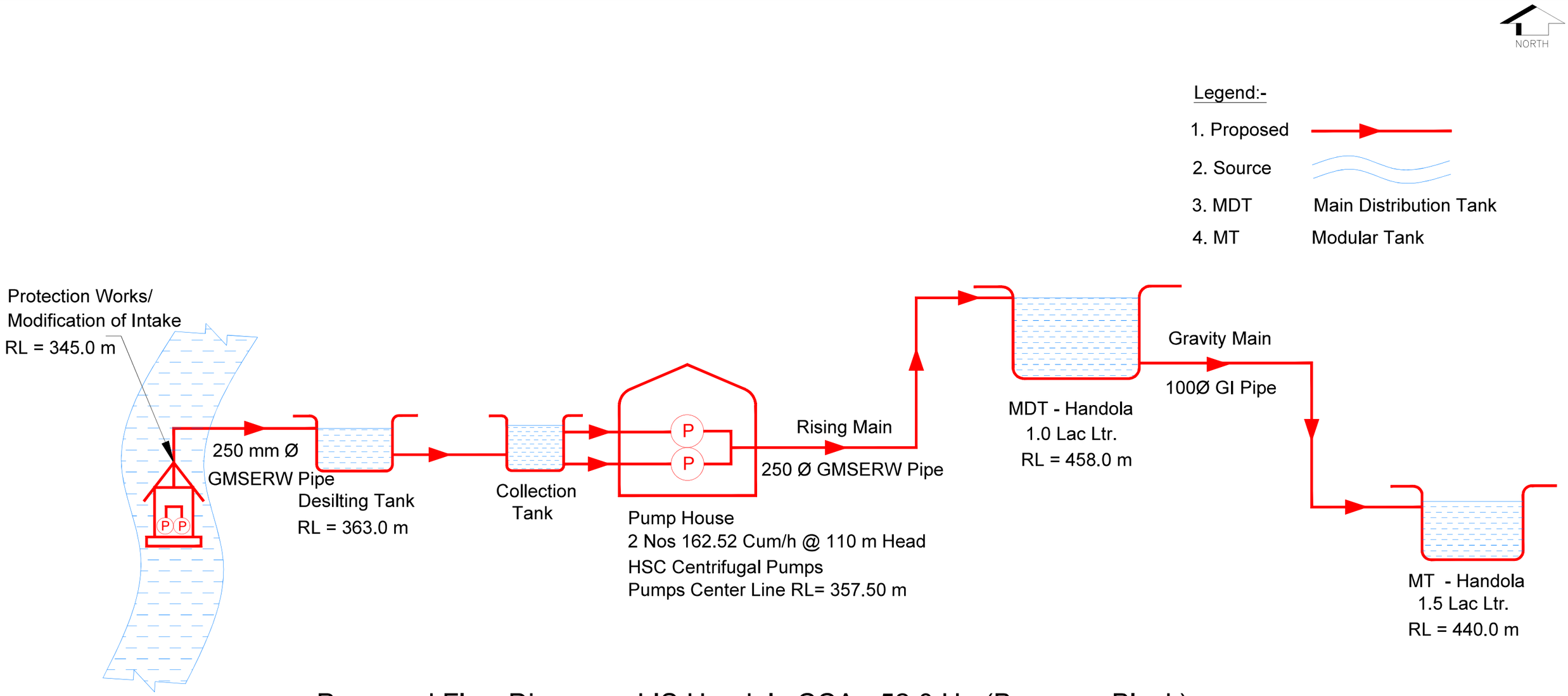

Proposed Flow Diagram - LIS Handola CCA - 52.0 Ha (Bangana Block)

P1	SIGN.												27-05-2022
	INITIALS	BSN	DG	DVB							MK	DK	
	REVISIONS	AS PER CLIENT REQUIREMENT											
P0	SIGN.												16-04-2022
	INITIALS	BSN	DG	DVB							MK	DK	
	REVISIONS												
ISSUE		DRN	DSN	CHD	CV	EL	IC	ME			PE/PM	APPD	DATE (dd-mm-yyyy)
					CLEARED								

'P' (PRELIMINARY) ISSUES ARE NOT TO BE USED FOR CONSTRUCTION / FABRICATION BUT ARE ISSUED FOR LIMITED PURPOSES ONLY AS INDICATED IN THE SMALL BLOCK ABOVE THIS BLOCK.

CONSTRUCTION / FABRICATION WORK IS PERMITTED ON 'R' (RELEASED) ISSUES ONLY.

INFORMATION CONTAINED WITHIN 'HOLD' IS NOT RELEASED FOR CONSTUCTION / FABRICATION. FIELD MUST GET DESIGN OFFICE TO CLEAR 'HOLDS' IN TIME BEFORE PROCEEDING WITH ANY CONSTRUCTION/ FABRICATION WORK RELATED TO 'HOLDS'.

SIGN. OF CLIENT:-

JE	AE	EE	SE

PURPOSE: FOR TENDER ONLY

DO NOT SCALE

Proprietary Notice and Version Control This document contains confidential information for use only by the " Client " ; for the Project under consideration, which is provided for the sole purpose of permitting the recipient to evaluate the information submitted herewith. In consideration of receipt of this document; unless agreed to in contrary in the Contract; the recipient agrees to maintain such information in confidence and to not reproduce or otherwise disclose this information to any person outside the recipient's organisation; except that there is no obligation to maintain the confidentiality of any information which was known to the recipient prior to receipt of such information from Tata Consulting Engineers Limited, or becomes publicly known through no fault of recipient, or Tata Consulting Engineers Limited, or is received without obligation of confidentiality from a third party owing no obligation of confidentiality to Tata Consulting Engineers Limited. All information given under this version over rides all and any kind of offers, assumptions, deliverables and contracts submitted verbally (and subsequently communicated in writing) or in writing or otherwise given under any and all previous version/s.

FILE NAME 12503A-CV-30407-Rev-P1

DETAILED DESIGN CONSULTANCY, HP-SHIVA (PACKAGE CS09)

IRRIGATION, HORTICULTURE, ORCHARDS AND VALUE CHAIN DEVELOPMENT

FLOW DIAGRAM OF PROPOSED LIS HANDOLA
BANGANA BLOCK, UNA DISTRICT

TATA CONSULTING ENGINEERS LIMITED
MUMBAI

SCALE : NTS	DWG NO. TCE.12503A-CV-3082-F	Legend:-	ISSUE P1
DC & DISC: DEL-CV			

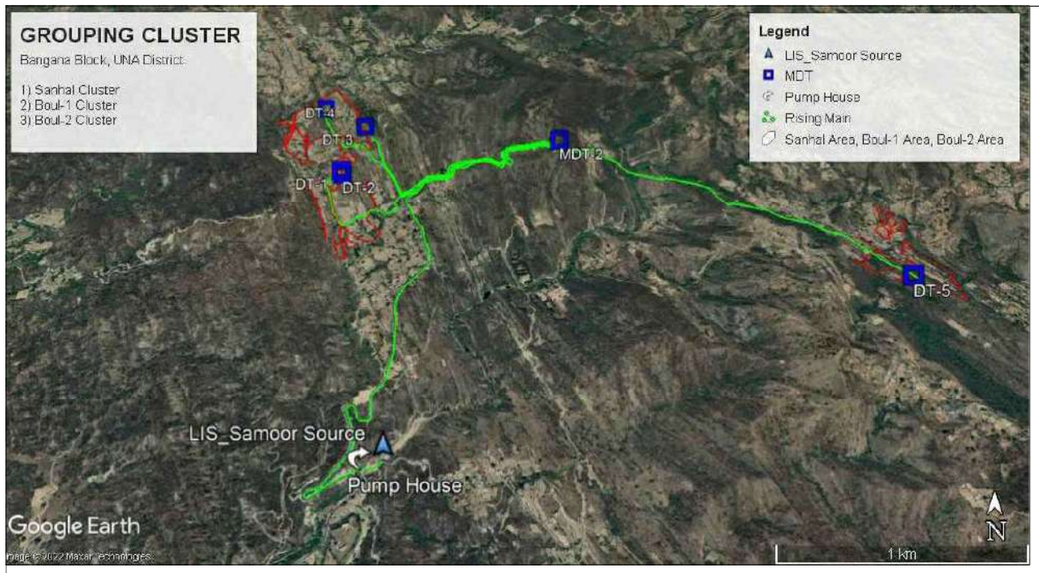

NORTH

Legend:-

1. Proposed
2. Existing
3. Source
4. MDT — Main Distribution Tank
5. MT — Modular Tank
6. DT — Distribution Tank

KEY PLAN

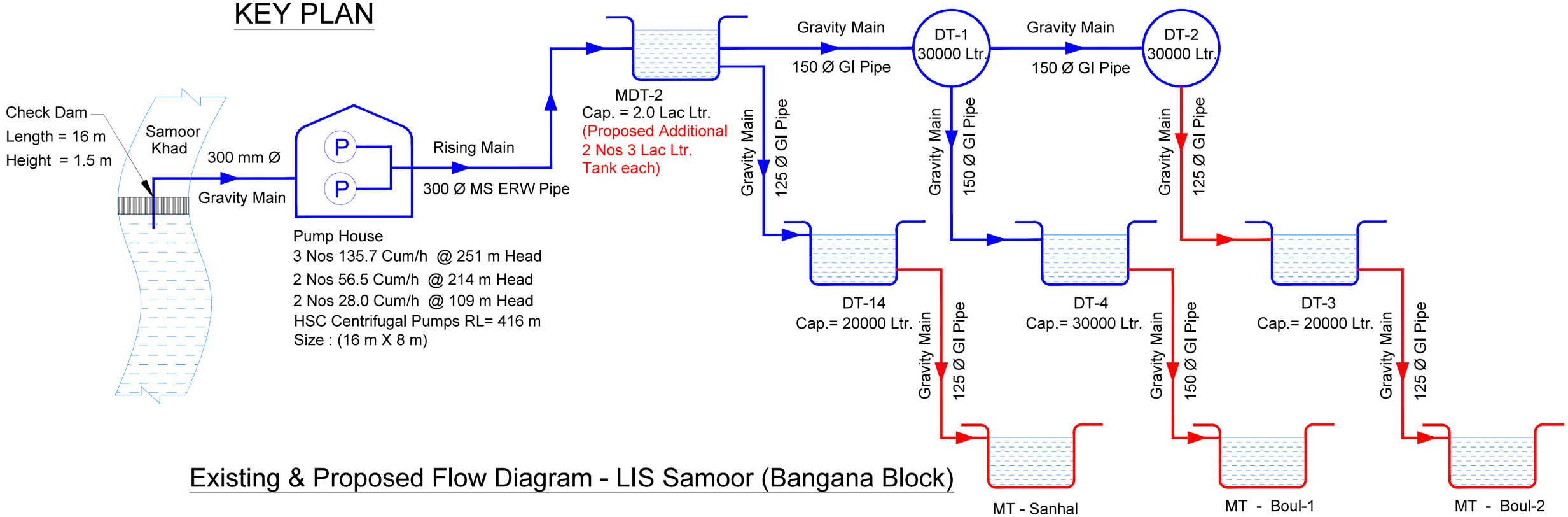

Existing & Proposed Flow Diagram - LIS Samoor (Bangana Block)

P1	SIGN.													27-05-2022
	INITIALS	BSN	DG	DVB							MK	DK		
	REVISIONS	AS PER CLIENT REQUIREMENT												
P0	SIGN.													16-04-2022
	INITIALS	BSN	DG	DVB							MK	DK		
	REVISIONS													
ISSUE		DRN	DSN	CHD	CV	EL	IC	ME			PE/PM	APPD	DATE (dd-mm-yyyy)	
					CLEARED									

'P' (PRELIMINARY) ISSUES ARE NOT TO BE USED FOR CONSTRUCTION / FABRICATION BUT ARE ISSUED FOR LIMITED PURPOSES ONLY AS INDICATED IN THE SMALL BLOCK ABOVE THIS BLOCK.

CONSTRUCTION / FABRICATION WORK IS PERMITTED ON 'R' (RELEASED) ISSUES ONLY.

INFORMATION CONTAINED WITHIN 'HOLD' IS NOT RELEASED FOR CONSTUCTION / FABRICATION. FIELD MUST GET DESIGN OFFICE TO CLEAR 'HOLDS' IN TIME BEFORE PROCEEDING WITH ANY CONSTRUCTION/ FABRICATION WORK RELATED TO 'HOLDS'.

SIGN. OF CLIENT:–

JE	AE	EE	SE

PURPOSE: FOR TENDER ONLY

DO NOT SCALE

Proprietary Notice and Version Control This document contains confidential information for use only by the " Client " ; for the Project under consideration, which is provided for the sole purpose of permitting the recipient to evaluate the information submitted herewith. In consideration of receipt of this document; unless agreed to in contrary in the Contract; the recipient agrees to maintain such information in confidence and to not reproduce or otherwise disclose this information to any person outside the recipient's organisation; except that there is no obligation to maintain the confidentiality of any information which was known to the recipient prior to receipt of such information from Tata Consulting Engineers Limited, or becomes publicly known through no fault of recipient, or Tata Consulting Engineers Limited, or is received without obligation of confidentiality from a third party owing no obligation of confidentiality to Tata Consulting Engineers Limited. All information given under this version over rides all and any kind of offers, assumptions, deliverables and contracts submitted verbally (and subsequently communicated in writing) or in writing or otherwise given under any and all previous version/s.

FILE NAME 12503A–CV–30408–Rev–P1

DETAILED DESIGN CONSULTANCY, HP–SHIVA (PACKAGE CS09)

IRRIGATION, HORTICULTURE, ORCHARDS AND VALUE CHAIN DEVELOPMENT

FLOW DIAGRAM OF PROPOSED LIS SAMOOR
(SANHAL, BOUL–1 & BOUL–2 CLUSTER)
BANGANA BLOCK, UNA DISTRICT

TATA CONSULTING ENGINEERS LIMITED
MUMBAI

SCALE : NTS	DWG NO. TCE.12503A–CV–3082–FD–30408	ISSUE P1
DC & DISC: DEL–CV		

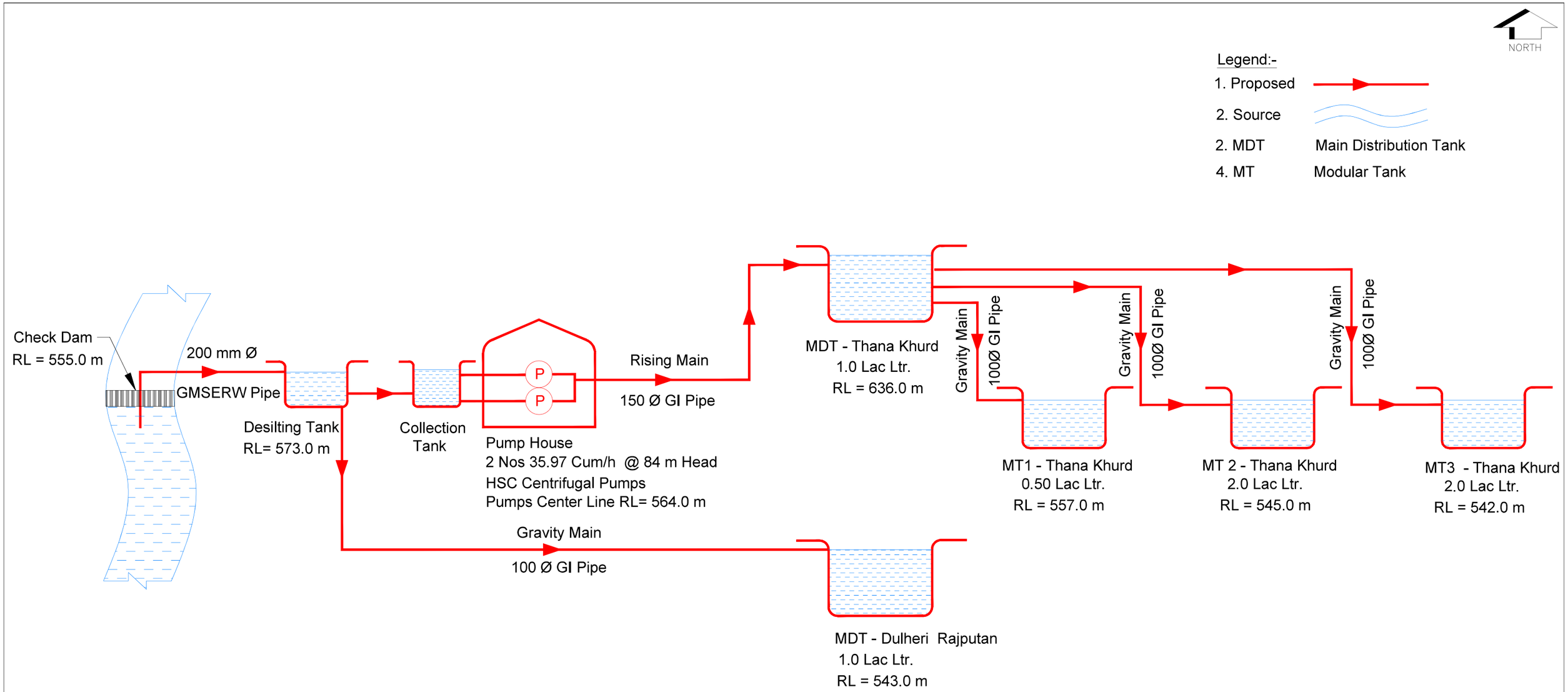

Proposed Flow Diagram - Dulheri Rajputan & Thana Khurd CCA - 36.45 Ha (Bangana Block)

KEY PLAN

P1	SIGN.													27-05-2022
	INITIALS	BSN	DG	DVB							MK	DK		
	REVISIONS	AS PER CLIENT REQUIREMENT												
P0	SIGN.													16-04-2022
	INITIALS	BSN	DG	DVB							MK	DK		
	REVISIONS													
ISSUE		DRN	DSN	CHD	CV	EL	IC	ME			PE/PM	APPD	DATE (dd-mm-yyyy)	
					CLEARED									

'P' (PRELIMINARY) ISSUES ARE NOT TO BE USED FOR CONSTRUCTION / FABRICATION BUT ARE ISSUED FOR LIMITED PURPOSES ONLY AS INDICATED IN THE SMALL BLOCK ABOVE THIS BLOCK.

CONSTRUCTION / FABRICATION WORK IS PERMITTED ON 'R' (RELEASED) ISSUES ONLY.

INFORMATION CONTAINED WITHIN 'HOLD' IS NOT RELEASED FOR CONSTUCTION / FABRICATION. FIELD MUST GET DESIGN OFFICE TO CLEAR 'HOLDS' IN TIME BEFORE PROCEEDING WITH ANY CONSTRUCTION/ FABRICATION WORK RELATED TO 'HOLDS'.

SIGN. OF CLIENT:-

JE	AE	EE	SE

PURPOSE: FOR TENDER ONLY

DO NOT SCALE

Proprietary Notice and Version Control This document contains confidential information for use only by the " Client " ; for the Project under consideration, which is provided for the sole purpose of permitting the recipient to evaluate the information submitted herewith. In consideration of receipt of this document; unless agreed to in contrary in the Contract; the recipient agrees to maintain such information in confidence and to not reproduce or otherwise disclose this information to any person outside the recipient's organisation; except that there is no obligation to maintain the confidentiality of any information which was known to the recipient prior to receipt of such information from Tata Consulting Engineers Limited, or becomes publicly known through no fault of recipient, or Tata Consulting Engineers Limited, or is received without obligation of confidentiality from a third party owing no obligation of confidentiality to Tata Consulting Engineers Limited. All information given under this version over rides all and any kind of offers, assumptions, deliverables and contracts submitted verbally (and subsequently communicated in writing) or in writing or otherwise given under any and all previous version/s.

FILE NAME 12503A-CV-30409-Rev-P1

DETAILED DESIGN CONSULTANCY, HP-SHIVA (PACKAGE CS09)

IRRIGATION, HORTICULTURE, ORCHARDS AND VALUE CHAIN DEVELOPMENT

FLOW DIAGRAM OF PROPOSED
LIS DULHERI RAJPUTAN & THANA KHURD
BANGANA BLOCK, UNA DISTRICT

TATA CONSULTING ENGINEERS LIMITED
MUMBAI

SCALE : NTS	DWG NO. TCE.12503A-CV-3082-FD-30409	ISSUE P1
DC & DISC: DEL-CV		

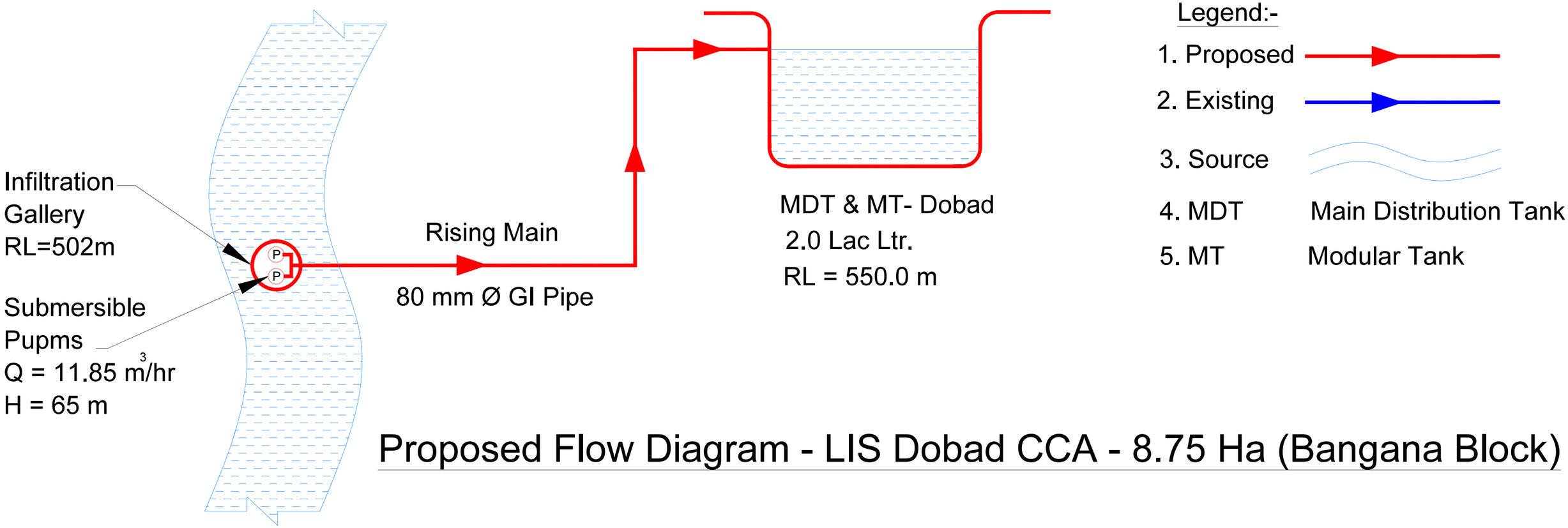

Proposed Flow Diagram - LIS Dobad CCA - 8.75 Ha (Bangana Block)

P1	SIGN.													27-05-2022
	INITIALS	BSN	DG	DVB							MK	DK		
	REVISIONS	AS PER CLIENT REQUIREMENT												
P0	SIGN.													16-04-2022
	INITIALS	BSN	DG	DVB							MK	DK		
	REVISIONS													
ISSUE		DRN	DSN	CHD	CV	EL	IC	ME			PE/PM	APPD	DATE (dd-mm-yyyy)	
					CLEARED									

'P' (PRELIMINARY) ISSUES ARE NOT TO BE USED FOR CONSTRUCTION / FABRICATION BUT ARE ISSUED FOR LIMITED PURPOSES ONLY AS INDICATED IN THE SMALL BLOCK ABOVE THIS BLOCK.

CONSTRUCTION / FABRICATION WORK IS PERMITTED ON 'R' (RELEASED) ISSUES ONLY.

INFORMATION CONTAINED WITHIN 'HOLD' IS NOT RELEASED FOR CONSTUCTION / FABRICATION. FIELD MUST GET DESIGN OFFICE TO CLEAR 'HOLDS' IN TIME BEFORE PROCEEDING WITH ANY CONSTRUCTION/ FABRICATION WORK RELATED TO 'HOLDS'.

SIGN. OF CLIENT:–

JE	AE	EE	SE

PURPOSE: FOR TENDER ONLY

DO NOT SCALE

Proprietary Notice and Version Control This document contains confidential information for use only by the " Client " ; for the Project under consideration, which is provided for the sole purpose of permitting the recipient to evaluate the information submitted herewith. In consideration of receipt of this document; unless agreed to in contrary in the Contract; the recipient agrees to maintain such information in confidence and to not reproduce or otherwise disclose this information to any person outside the recipient's organisation; except that there is no obligation to maintain the confidentiality of any information which was known to the recipient prior to receipt of such information from Tata Consulting Engineers Limited, or becomes publicly known through no fault of recipient, or Tata Consulting Engineers Limited, or is received without obligation of confidentiality from a third party owing no obligation of confidentiality to Tata Consulting Engineers Limited. All information given under this version over rides all and any kind of offers, assumptions, deliverables and contracts submitted verbally (and subsequently communicated in writing) or in writing or otherwise given under any and all previous version/s.

FILE NAME 12503A–CV–30410–Rev–P1

DETAILED DESIGN CONSULTANCY, HP–SHIVA (PACKAGE CS09)

IRRIGATION, HORTICULTURE, ORCHARDS AND VALUE CHAIN DEVELOPMENT

FLOW DIAGRAM OF PROPOSED LIS DOBAD
BANGANA BLOCK, UNA DISTRICT

TATA CONSULTING ENGINEERS LIMITED
MUMBAI

SCALE : NTS	DWG NO. TCE.12503A–CV–3082–FD–30410	ISSUE P1
DC & DISC: DEL–CV		

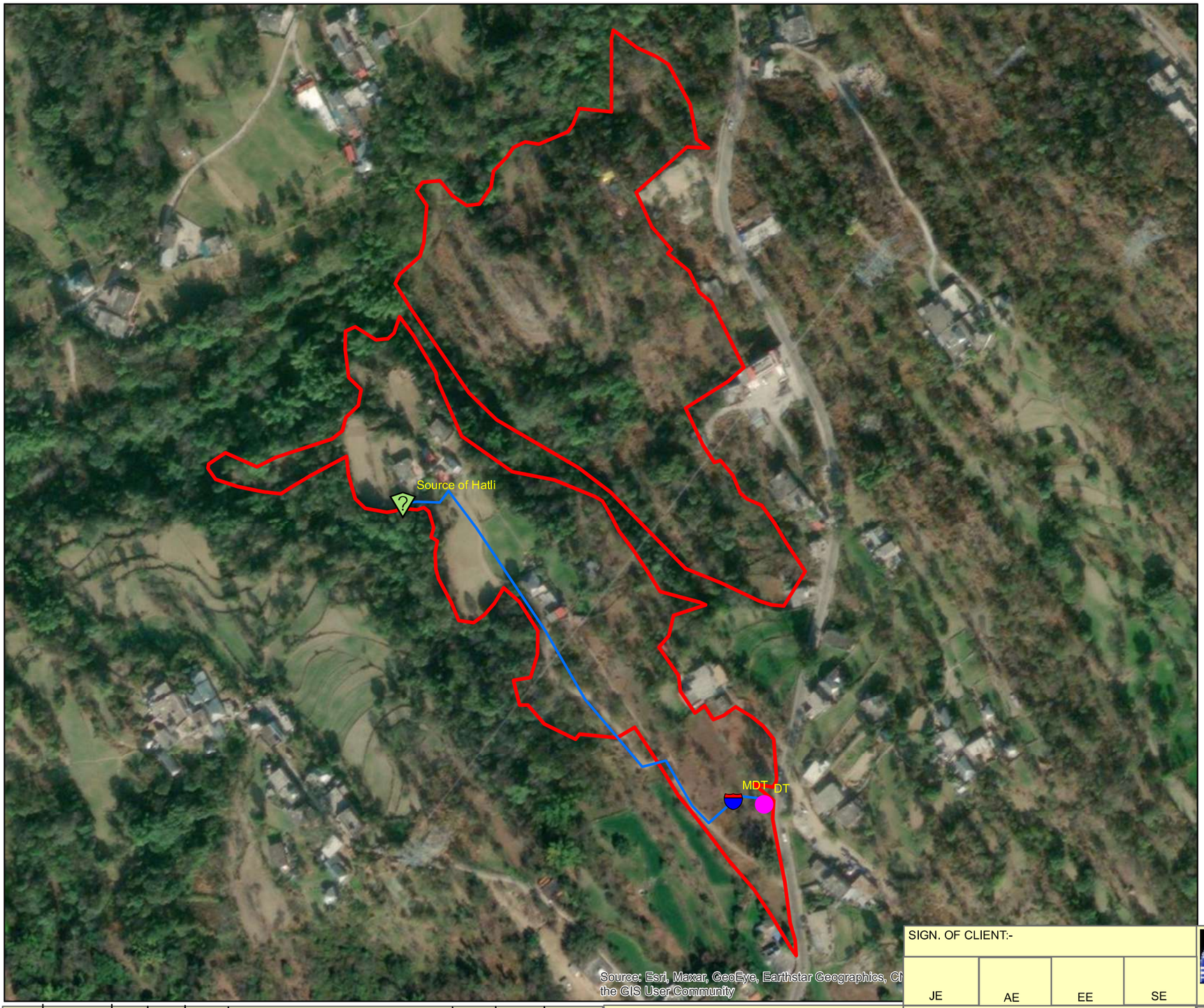

N
W E
S

Legend

- Source of Halti
- Main Delivery Tank
- Delivery Tank
- Rising_Main
- HATLI Cluster

	SIGN.									
	INITIALS									
	REVISIONS									
P0	SIGN.									
	INITIALS	GKJ	DG	MK			MK	DK		17-04-2022
	REVISIONS									
ISSUE		DRN	DSN	CHD	CV	EL	IC	ME	PE/PM	APPD.	DATE
					CLEARED						

'P' (PRELIMINARY) ISSUES ARE NOT TO BE USED FOR CONSTRUCTION / FABRICATION BUT ARE ISSUED FOR LIMITED PURPOSES ONLY AS INDICATED IN THE SMALL BLOCK ABOVE THIS BLOCK.

CONSTRUCTION / FABRICATION WORK IS PERMITTED ON 'R' (RELEASED) ISSUES ONLY.

INFORMATION CONTAINED WITHIN 'HOLD' IS NOT RELEASED FOR CONSTUCTION / FABRICATION. FIELD MUST GET DESIGN OFFICE TO CLEAR 'HOLDS' IN TIME BEFORE PROCEEDING WITH ANY CONSTRUCTION/FABRICATION WORK RELATED TO 'HOLDS'.

SIGN. OF CLIENT:-

JE	AE	EE	SE

PURPOSE: FOR TENDER ONLY

Proprietary Notice and Version Control This document contains confidential information for use only by the " Client " ; for the Project under consideration, which is provided for the sole purpose of permitting the recipient to evaluate the information submitted here with.In consideration of receipt of this document; unless agreed to in contrary in the Contract; the recipient agrees to maintain such information in confidence and to not reproduce or otherwise disclose this information to any person outside the recipient's organisation; except that there is no obligation to maintain the confidentiality of any information which was known to the recipient prior to receipt of such information from Tata Consulting Engineers Limited, or becomes publicly known through no fault of recipient, or Tata Consulting Engineers Limited, or is received without obligation of confidentiality from a third party owing no obligation of confidentiality to Tata Consulting Engineers Limited. All information given under this version over rides all and any kind of offers, assumptions, deliverables and contracts submitted verbally (and subsequently communicated in writing) or in writing or otherwise given under any and all previous version/s.

File Name:12503A-CV-30450-Rev-P0

DETAILED DESIGN CONSULTANCY, HP-SHIVA (PACKAGE CS09)

IRRIGATION, HORTICULTURE, ORCHARDS AND VALUE CHAIN DEVELOPMENT

TITLE:-

KEY PLAN OF HALTI CLUSTER
BANGANA BLOCK, UNA DISTRICT.

TATACONSULTING ENGINEERS LIMITED.
MUMBAI

SCALE:- 1:3,000

DL.CEN.:- DEL-CV

DWG. No:- TCE.12503A-CV-3005-LM-30450

ISSUE:- P0

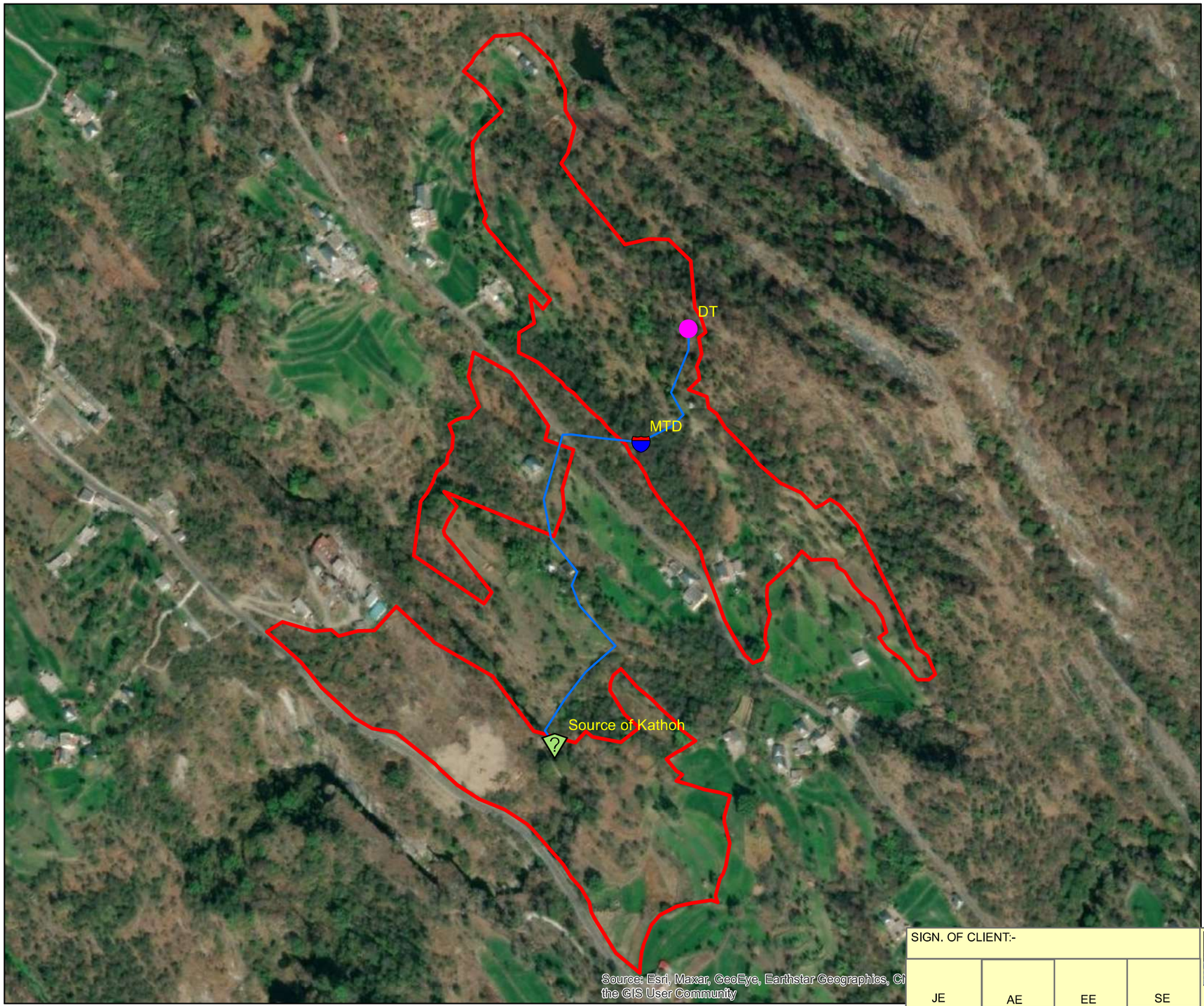

N
W E
S

Legend

- Source of Kathoh
- Main Delivery Tank
- Delivery Tank
- Rising_Main
- KATHOH Cluster

	SIGN.										
	INITIALS										
	REVISIONS										
P0	SIGN.										
	INITIALS	GKJ	DG	MK					MK	DK	17-04-2022
	REVISIONS										
ISSUE		DRN	DSN	CHD	CV	EL	IC	ME	PE/PM	APPD.	DATE
					CLEARED						

'P' (PRELIMINARY) ISSUES ARE NOT TO BE USED FOR CONSTRUCTION / FABRICATION BUT ARE ISSUED FOR LIMITED PURPOSES ONLY AS INDICATED IN THE SMALL BLOCK ABOVE THIS BLOCK.

CONSTRUCTION / FABRICATION WORK IS PERMITTED ON 'R' (RELEASED) ISSUES ONLY.

INFORMATION CONTAINED WITHIN 'HOLD' IS NOT RELEASED FOR CONSTUCTION / FABRICATION. FIELD MUST GET DESIGN OFFICE TO CLEAR 'HOLDS' IN TIME BEFORE PROCEEDING WITH ANY CONSTRUCTION/FABRICATION WORK RELATED TO 'HOLDS'.

SIGN. OF CLIENT:-

JE	AE	EE	SE

PURPOSE: FOR TENDER ONLY

Proprietary Notice and Version Control This document contains confidential information for use only by the " Client " ; for the Project under consideration, which is provided for the sole purpose of permitting the recipient to evaluate the information submitted here with.In consideration of receipt of this document; unless agreed to in contrary in the Contract; the recipient agrees to maintain such information in confidence and to not reproduce or otherwise disclose this information to any person outside the recipient's organisation; except that there is no obligation to maintain the confidentiality of any information which was known to the recipient prior to receipt of such information from Tata Consulting Engineers Limited, or becomes publicly known through no fault of recipient, or Tata Consulting Engineers Limited, or is received without obligation of confidentiality from a third party owing no obligation of confidentiality to Tata Consulting Engineers Limited. All information given under this version over rides all and any kind of offers, assumptions, deliverables and contracts submitted verbally (and subsequently communicated in writing) or in writing or otherwise given under any and all previous version/s.

File Name :12503A-CV-30451-Rev-P0

DETAILED DESIGN CONSULTANCY, HP-SHIVA (PACKAGE CS09)

IRRIGATION, HORTICULTURE, ORCHARDS AND VALUE CHAIN DEVELOPMENT

TITLE:-

KEY PLAN OF KATHOH CLUSTER
BANGANA BLOCK, UNA DISTRICT.

TATACONSULTING ENGINEERS LIMITED.
MUMBAI

SCALE:- 1:4,500

DL.CEN.:- DEL-CV

DWG. No:- TCE.12503A-CV-3005-LM-30451

ISSUE:- P0

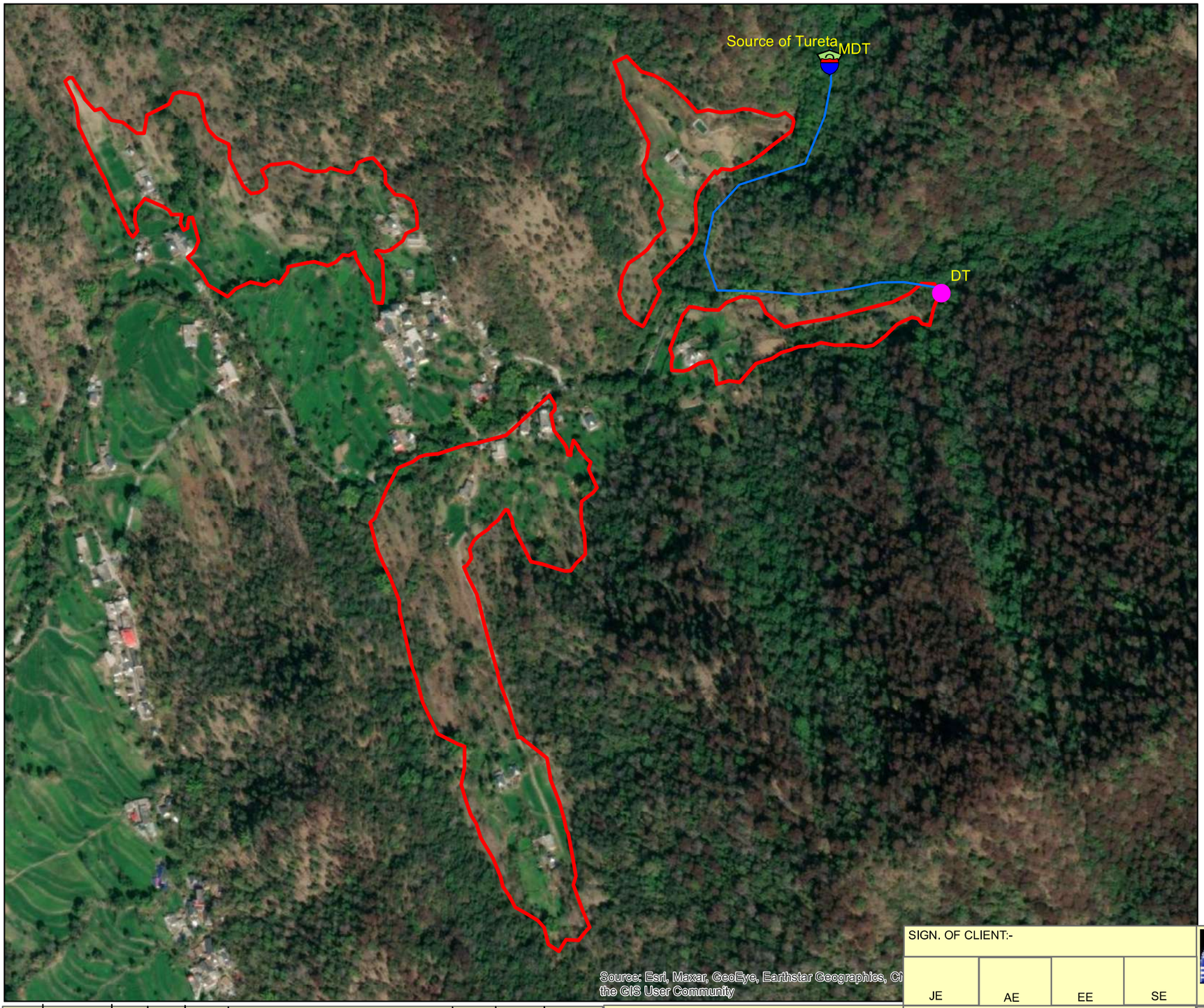

Legend

- Source of Tureta
- Main Delivery Tank
- Delivery Tank
- Rising_Main
- TURRETA

	SIGN.											
	INITIALS											
	REVISIONS											
P0	SIGN.											
	INITIALS	GKJ	DG	MK						MK	DK	17-04-2022
	REVISIONS											
ISSUE		DRN	DSN	CHD	CV	EL	IC	ME			PE/PM	APPD.	DATE
					CLEARED							

'P' (PRELIMINARY) ISSUES ARE NOT TO BE USED FOR CONSTRUCTION / FABRICATION BUT ARE ISSUED FOR LIMITED PURPOSES ONLY AS INDICATED IN THE SMALL BLOCK ABOVE THIS BLOCK.

CONSTRUCTION / FABRICATION WORK IS PERMITTED ON 'R' (RELEASED) ISSUES ONLY.

INFORMATION CONTAINED WITHIN 'HOLD' IS NOT RELEASED FOR CONSTUCTION / FABRICATION. FIELD MUST GET DESIGN OFFICE TO CLEAR 'HOLDS' IN TIME BEFORE PROCEEDING WITH ANY CONSTRUCTION/FABRICATION WORK RELATED TO 'HOLDS'.

SIGN. OF CLIENT:-

JE	AE	EE	SE

PURPOSE: FOR TENDER ONLY

Proprietary Notice and Version Control This document contains confidential information for use only by the " Client " ; for the Project under consideration, which is provided for the sole purpose of permitting the recipient to evaluate the information submitted here with.In consideration of receipt of this document; unless agreed to in contrary in the Contract; the recipient agrees to maintain such information in confidence and to not reproduce or otherwise disclose this information to any person outside the recipient's organisation; except that there is no obligation to maintain the confidentiality of any information which was known to the recipient prior to receipt of such information from Tata Consulting Engineers Limited, or becomes publicly known through no fault of recipient, or Tata Consulting Engineers Limited, or is received without obligation of confidentiality from a third party owing no obligation of confidentiality to Tata Consulting Engineers Limited, All information given under this version over rides all and any kind of offers, assumptions, deliverables and contracts submitted verbally (and subsequently communicated in writing) or in writing or otherwise given under any and all previous version/s.

File Name:12503A-CV-30452-Rev-P0

DETAILED DESIGN CONSULTANCY, HP-SHIVA (PACKAGE CS09)

IRRIGATION, HORTICULTURE, ORCHARDS AND VALUE CHAIN DEVELOPMENT

TITLE:-

KEY PLAN OF TURETA CLUSTER
BANGANA BLOCK, UNA DISTRICT.

TATACONSULTING ENGINEERS LIMITED.
MUMBAI

SCALE:- 1:5,500

DL.CEN.:- DEL-CV

DWG. No:- TCE.12503A-CV-3005-LM-30452

ISSUE:- P0

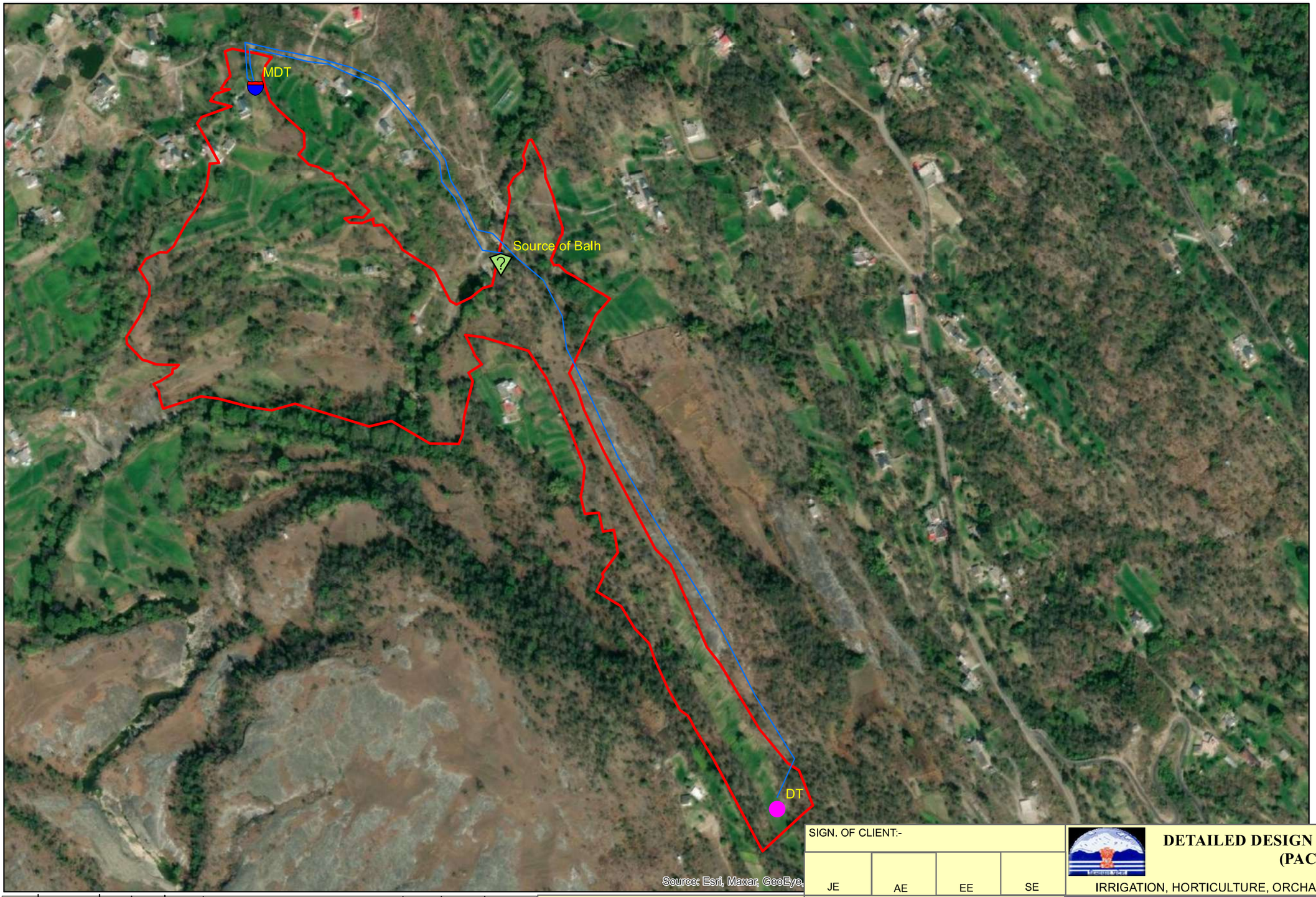

N
W E
S

Legend

- Source of Balh
- Main Delivery Tank
- Delivery Tank
- Rising Main
- Balh Cluster

SIGN. OF CLIENT:-

JE	AE	EE	SE

DETAILED DESIGN CONSULTANCY, HP-SHIVA (PACKAGE CS09)

IRRIGATION, HORTICULTURE, ORCHARDS AND VALUE CHAIN DEVELOPMENT

	SIGN.									
	INITIALS									
	REVISIONS									
P0	SIGN.									
	INITIALS	GKJ	DG	MK			MK	DK	17-04-2022	
	REVISIONS									
ISSUE		DRN	DSN	CHD	CV	EL	IC	ME	PE/PM	APPD.	DATE
					CLEARED						

'P' (PRELIMINARY) ISSUES ARE NOT TO BE USED FOR CONSTRUCTION / FABRICATION BUT ARE ISSUED FOR LIMITED PURPOSES ONLY AS INDICATED IN THE SMALL BLOCK ABOVE THIS BLOCK.

CONSTRUCTION / FABRICATION WORK IS PERMITTED ON 'R' (RELEASED) ISSUES ONLY.

INFORMATION CONTAINED WITHIN 'HOLD' IS NOT RELEASED FOR CONSTUCTION / FABRICATION. FIELD MUST GET DESIGN OFFICE TO CLEAR 'HOLDS' IN TIME BEFORE PROCEEDING WITH ANY CONSTRUCTION/FABRICATION WORK RELATED TO 'HOLDS'.

PURPOSE: FOR TENDER ONLY

Proprietary Notice and Version Control This document contains confidential information for use only by the " Client " ; for the Project under consideration, which is provided for the sole purpose of permitting the recipient to evaluate the information submitted here with.In consideration of receipt of this document; unless agreed to in contrary in the Contract; the recipient agrees to maintain such information in confidence and to not reproduce or otherwise disclose this information to any person outside the recipient's organisation; except that there is no obligation to maintain the confidentiality of any information which was known to the recipient prior to receipt of such information from Tata Consulting Engineers Limited, or becomes publicly known through no fault of recipient, or Tata Consulting Engineers Limited, or is received without obligation of confidentiality from a third party owing no obligation of confidentiality to Tata Consulting Engineers Limited. All information given under this version over rides all and any kind of offers, assumptions, deliverables and contracts submitted verbally (and subsequently communicated in writing) or in writing or otherwise given under any and all previous version/s.

File Name: 12503A-CV-30453-Rev-P0

TITLE:-

KEY PLAN OF BALH CLUSTER
BANGANA BLOCK, UNA DISTRICT.

TATACONSULTING ENGINEERS LIMITED.
MUMBAI

SCALE:- 1:5,000

DL.CEN.:- DEL-CV

DWG. No:- TCE.12503A-CV-3005-LM-30453

ISSUE:- P0

N
W E
S

Legend

- Source of Baral
- Main Delivery Tank
- Delivery Tank -1
- Delivery Tank -2
- Delivery Tank -3
- Rising_Main
- Baral_Cluster

	SIGN.									
	INITIALS									
	REVISIONS									
P0	SIGN.									17-04-2022
	INITIALS	GKJ	DG	MK			MK	DK		
	REVISIONS									
ISSUE		DRN	DSN	CHD	CV	EL	IC	ME	PE/PM	APPD.	DATE
					CLEARED						

'P' (PRELIMINARY) ISSUES ARE NOT TO BE USED FOR CONSTRUCTION / FABRICATION BUT ARE ISSUED FOR LIMITED PURPOSES ONLY AS INDICATED IN THE SMALL BLOCK ABOVE THIS BLOCK.

CONSTRUCTION / FABRICATION WORK IS PERMITTED ON 'R' (RELEASED) ISSUES ONLY.

INFORMATION CONTAINED WITHIN 'HOLD' IS NOT RELEASED FOR CONSTUCTION / FABRICATION. FIELD MUST GET DESIGN OFFICE TO CLEAR 'HOLDS' IN TIME BEFORE PROCEEDING WITH ANY CONSTRUCTION/FABRICATION WORK RELATED TO 'HOLDS'.

SIGN. OF CLIENT:-

JE	AE	EE	SE

PURPOSE: FOR TENDER ONLY

Proprietary Notice and Version Control This document contains confidential information for use only by the " Client " ; for the Project under consideration, which is provided for the sole purpose of permitting the recipient to evaluate the information submitted here with.In consideration of receipt of this document; unless agreed to in contrary in the Contract; the recipient agrees to maintain such information in confidence and to not reproduce or otherwise disclose this information to any person outside the recipient's organisation; except that there is no obligation to maintain the confidentiality of any information which was known to the recipient prior to receipt of such information from Tata Consulting Engineers Limited, or becomes publicly known through no fault of recipient, or Tata Consulting Engineers Limited, or is received without obligation of confidentiality from a third party owing no obligation of confidentiality to Tata Consulting Engineers Limited. All information given under this version over rides all and any kind of offers, assumptions, deliverables and contracts submitted verbally (and subsequently communicated in writing) or in writing or otherwise given under any and all previous version/s.

File Name: 12503A-CV-30454-Rev-P0

DETAILED DESIGN CONSULTANCY, HP-SHIVA (PACKAGE CS09)

IRRIGATION, HORTICULTURE, ORCHARDS AND VALUE CHAIN DEVELOPMENT

TITLE:-

KEY PLAN OF BARAL CLUSTER
BANGANA BLOCK, UNA DISTRICT.

TATACONSULTING ENGINEERS LIMITED.
MUMBAI

SCALE:- 1:6,000

DL.CEN.:- DEL-CV

DWG. No:- TCE.12503A-CV-3005-LM-30454

ISSUE:- P0

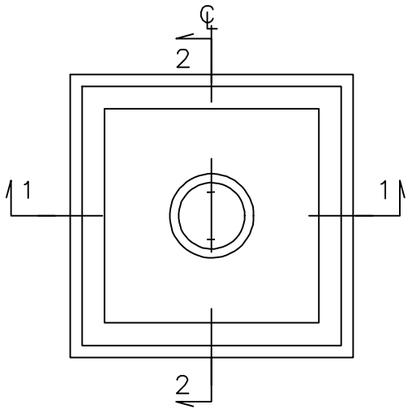

TOP PLAN

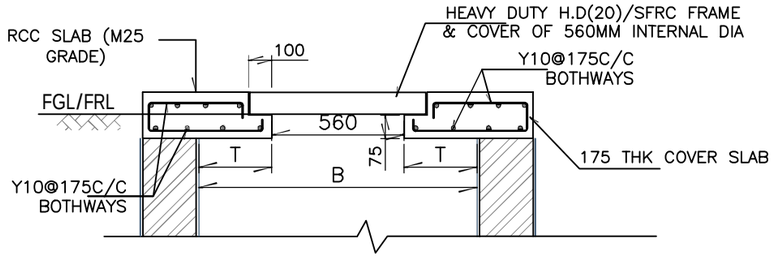

DETAIL A

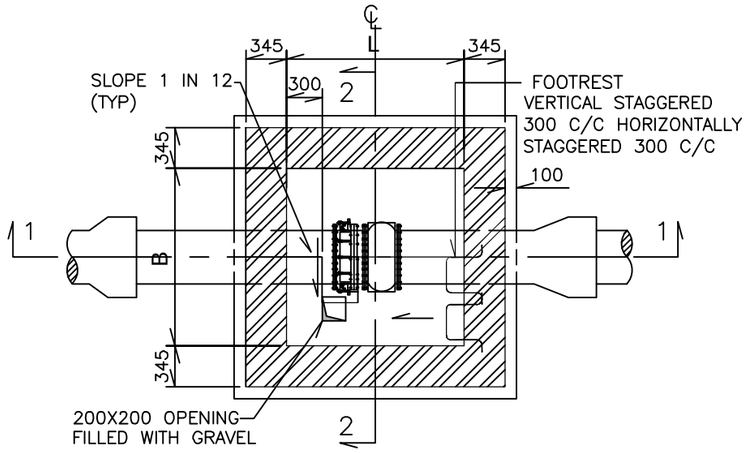

SECTIONAL PLAN

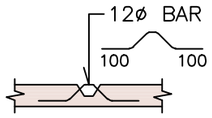

LIFTING HOOK DETAIL

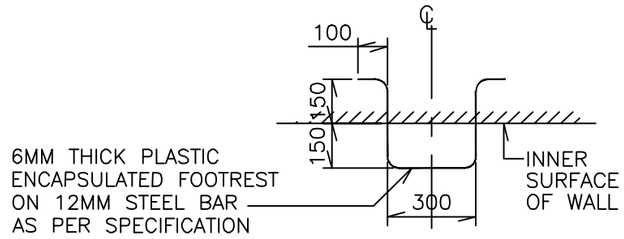

TYPICAL DETAILS OF ACCESS RUNGS

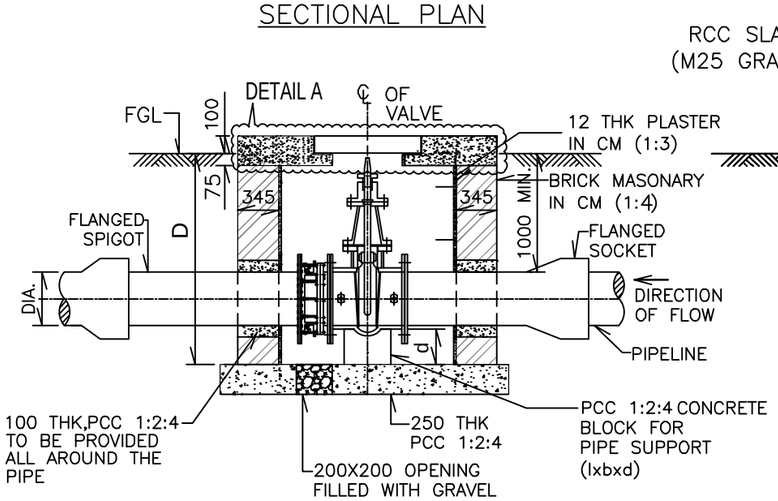

SECTION 1–1

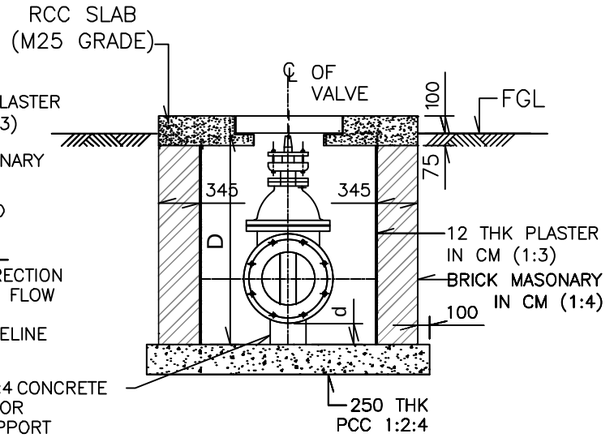

SECTION 2–2

LEGEND

TYP	— — —	TYPICAL
DIA	— — —	DIAMETER
UN	— — —	UNLESS NOTED
MS	— — —	MILD STEEL
DI	— — —	DUCTILE IRON
THK	— — —	THICK
℄	— — —	CENTER LINE
IL	— — —	INVERT LEVEL
PCC	— — —	PLAIN CEMENT CONCRETE
RC	— — —	REINFORCED CONCRETE
EQ.	— — —	EQUAL

NOTES:

1. ALL DIMENSIONS ARE IN MILLIMETRE AND LEVELS IN METRE UNLESS NOTED.
2. GRADE OF PCC SHALL BE M15 WITH MAXIMUM 40mm DOWN GRADED AGGREGATES CONFORMING TO SPECIFICATION.
3. REINFORCEMENT SHALL BE HIGH YIELD STRENGTH DEFORMED BARS TO GRADE Fe500 CONFORMING TO IS:1786 (LATEST ISSUE).
4. CLEAR COVER TO MAIN REINFORCEMENT SHALL BE AS FOLLOWS. RC COVER–20mm TOP & BOTTOM
5. SAFE BEARING CAPACITY OF SOIL IS CONSIDERED AS 15 T/Sqm. AT FOUNDING LEVEL.
6. THE ARRANGEMENT RELATED TO VALVE AND FITTINGS SHOWN IN THE DRAWING ARE INDICATIVE ONLY. BEFORE CONSTRUCTION, ARRANGEMENT OF VALVE AND FITTINGS SHALL BE PROVIDED BY THE CONTRACTOR TO ENGINEER FOR APPROVAL.
7. BRICK MASONRY SHALL BE IN CM (1:4).
8. BRICKS SHALL BE OF MINIMUM 75 Kg/cm^2 COMPRESSIVE STRENGTH.
9. THE TYPICAL DETAILS OF CHAMBER ARE APPLICABLE FOR 150mm TO 600mm DIA PIPELINE.
10. VALVE CHAMBERS SHALL BE CONSTRUCTED IN RCC IN CASE HIGH WATER TABLE AND SPACE CONSTRAINT.
11. THE FOOTREST SHALL BE PROVIDED FROM TOP COVER TO PIPE BARREL TOP AND THEN PIPE BARREL TOP UPTO 300mm ABOVE CHAMBER BOTTOM.
12. VALVE SPINDLE EXTENSIONS TO BE FITTED TO BRING TOP OF VALVE SPINDLE TO WITHIN 100mm TO UNDERSIDE OF RC COVER.

TABLE:

DIA. OF PIPE	CHAMBER SIZE			PEDESTAL		
	L	B	D	l	b	d (Min)
300	1200	1200	1600	150	250	100
200	1200	1200	1600	100	200	100
150	900	900	1600	100	150	100

	SIGN.												
	INITIALS												
	REVISIONS												
P0	SIGN.												
	INITIALS	SM	MJ	DVP							NMS	NMS	15-04-2022
	REVISIONS												
ISSUE		DRN	DSN	CHD	CV	EL	IC	ME			PE/PM	APPD	DATE (dd-mm-yyyy)
					CLEARED								

'P' (PRELIMINARY) ISSUES ARE NOT TO BE USED FOR CONSTRUCTION / FABRICATION BUT ARE ISSUED FOR LIMITED PURPOSES ONLY AS INDICATED IN THE SMALL BLOCK ABOVE THIS BLOCK.

CONSTRUCTION / FABRICATION WORK IS PERMITTED ON 'R' (RELEASED) ISSUES ONLY.

INFORMATION CONTAINED WITHIN 'HOLD' IS NOT RELEASED FOR CONSTUCTION / FABRICATION. FIELD MUST GET DESIGN OFFICE TO CLEAR 'HOLDS' IN TIME BEFORE PROCEEDING WITH ANY CONSTRUCTION/ FABRICATION WORK RELATED TO 'HOLDS'.

SIGN. OF CLIENT:–

JE	AE	EE	SE

PURPOSE : FOR TENDER ONLY

DO NOT SCALE

Proprietary Notice and Version Control This document contains confidential information for use only by the "Client"; for the Project under consideration, which is provided for the sole purpose of permitting the recipient to evaluate the information submitted herewith. In consideration of receipt of this document; unless agreed to in contrary in the Contract; the recipient agrees to maintain such information in confidence and to not reproduce or otherwise disclose this information to any person outside the recipient's organisation; except that there is no obligation to maintain the confidentiality of any information which was known to the recipient prior to receipt of such information from Tata Consulting Engineers Limited, or becomes publicly known through no fault of recipient, or Tata Consulting Engineers Limited, or is received without obligation of confidentiality from a third party owing no obligation of confidentiality to Tata Consulting Engineers Limited. All information given under this version over rides all and any kind of offers, assumptions, deliverables and contracts submitted verbally (and subsequently communicated in writing) or in writing or otherwise given under any and all previous version/s.

FILE NAME 12503A–CV–30581–Rev–P0

DETAILED DESIGN CONSULTANCY, HP–SHIVA (PACKAGE CS09)

IRRIGATION, HORTICULTURE, ORCHARDS AND VALUE CHAIN DEVELOPMENT

TYPICAL SLUICE VALVE CHAMBER DETAILS

TATA CONSULTING ENGINEERS LIMITED

MUMBAI

SCALE : NTS	DWG NO. TCE.12503A–CV–3082–WS–30581	ISSUE P0
DC & DISC: DEL–CV		

SIZE–A3

FILE NAME: F–093–Rev–R1.DWG

TCE FORM NO. 093 R1

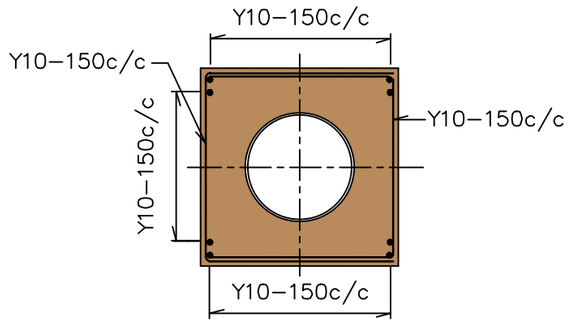

DETAILS OF CONCRETE BED & ENCASEMENT OF PIPE

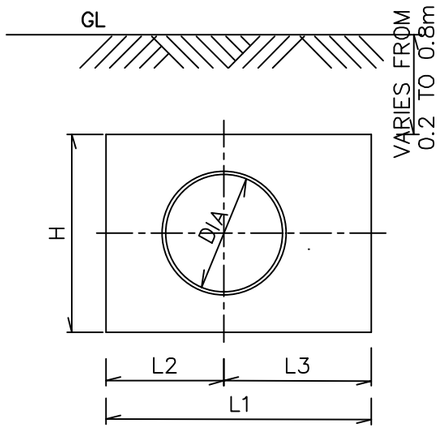

SECTION 1–1

TABLE

INTERNAL DIAMETER OF PIPE (mm)	ANGLE OF BEND	DESIGN PRESSURE (kg/m^2)	SOIL COVER OVER PIPE Ds (mm)	H (m)	L1 (m)	L2 (m)	L3 (m)	L (m)	B1 (m)	B2 (m)
100	90°	4.35	1000	0.70	0.75	0.40	0.35	0.77	0.70	0.35
100	45°	4.35	1000	0.60	0.55	0.30	0.25	0.57	0.60	0.30
100	22.5°	4.35	1000	0.45	0.45	0.25	0.20	0.46	0.50	0.25
100	90°	4.85	1000	0.70	0.80	0.45	0.35	0.82	0.70	0.35
100	45°	4.85	1000	0.60	0.55	0.30	0.25	0.57	0.60	0.30
100	22.5°	4.85	1000	0.50	0.45	0.25	0.20	0.47	0.50	0.25
100	90°	5.93	1000	0.80	0.75	0.40	0.35	0.78	0.80	0.40
100	45°	5.93	1000	0.65	0.65	0.35	0.30	0.67	0.70	0.35
100	22.5°	5.93	1000	0.50	0.55	0.30	0.25	0.56	0.50	0.25
150	90°	3.33	1000	0.85	0.85	0.45	0.40	0.88	0.90	0.45
150	45°	3.33	1000	0.70	0.70	0.40	0.30	0.72	0.70	0.35
150	22.5°	3.33	1000	0.55	0.55	0.30	0.25	0.57	0.50	0.25
250	90°	3.75	1000	1.25	1.25	0.70	0.55	1.29	1.30	0.65
250	45°	3.75	1000	1.00	1.05	0.60	0.45	1.08	1.00	0.50
250	22.5°	3.75	1000	0.80	0.80	0.45	0.35	0.82	0.80	0.40
250	90°	6.03	1000	1.45	1.45	0.80	0.65	1.49	1.50	0.75
250	45°	6.03	1000	1.15	1.25	0.70	0.55	1.28	1.10	0.55
250	22.5°	6.03	1000	0.95	0.90	0.50	0.40	0.93	0.90	0.45
350	90°	5.93	1000	1.80	1.80	1.00	0.80	1.86	1.80	0.90
350	45°	5.93	1000	1.45	1.55	0.85	0.70	1.59	1.50	0.75
350	22.5°	5.93	1000	1.20	1.15	0.65	0.50	1.19	1.20	0.60
500	90°	4.68	1000	2.15	2.05	1.15	0.90	2.12	2.20	1.10
500	45°	4.68	1000	1.70	1.80	1.00	0.80	1.85	1.70	0.85
500	22.5°	4.68	1000	1.40	1.35	0.75	0.60	1.39	1.40	0.70

LEGEND:

DIA ——— DIAMETER
B ——— BREADTH
L ——— LENGTH
H ——— HEIGHT
mm ——— MILLIMETERS

NOTES:

1. ALL DIMENSIONS ARE IN MILLIMETRES AND LEVELS IN METRES UNLESS NOTED.
2. INVERT LEVEL OF PIPES SHALL BE AS PER RELEVANT NETWORK DRAWINGS.
3. NO CONCRETE SHALL BE PLACED AROUND JOINTS OF PIPELINE, UNTIL THAT LENGTH OF PIPE HAS PASSED SECTIONAL HYDRAULIC TEST.
4. STEEL FOR REINFORCEMENT SHALL BE HIGH YIELD STRENGTH DEFORMED BARS OF GRADE Fe 500
5. REINFORCEMENT LAP LENGTHS SHALL BE 50xDIAMETER OF SMALLER BAR.
6. CONCRETE TO BE USED SHALL BE OF GRADE M20 WITH 20mm DOWN GRADED AGGRAGATES CONFORMING TO SPECIFICATIONS.
7. CLEAR COVER TO REINFORCEMENT BOTTOM AND SIDES – 30mm
8. DURING CONSTRUCTION, IF GROUND WATER TABLE IS MET WITH, IT SHALL BE BROUGHT TO THE NOTICE OF ENGINEER FOR MAKING NECESSARY CHANGES IN THE DESIGN.
9. SOIL BENEATH AND BY THE SIDE OF THE THRUST BLOCK, WHICH ULTIMATELY BEARS THRUST THROUGH CONCRETE MEDIUM, MUST REMAIN UNDISTURBED. IN CASE ANY EXTRA EXCAVATION IS DONE IN TRENCHES, WHERE THE THRUST BLOCK IS TO BE PROVIDED, THE SAME SHALL BE FILLED WITH 1:4:8 CONCRETE
10. PIPES AND SPECIALS SHALL BE SUITABLY SUPPORTED WHILE CONCRETING THE THRUST BLOCK AS DIRECTED BY ENGINEER.
11. TESTING OF MAINS SHALL BE DONE AFTER CASTING OF THRUST BLOCKS AND COMPACTION OF BACKFILLING.
12. AT THE TIME OF TESTING, COMPACTED SOIL SHALL BE PLACED ON THE THRUST BLOCK UP TO THE ROAD LEVEL.
13. THRUST BLOCKS NEED TO BE PLACED AS PER SITE CONDITION

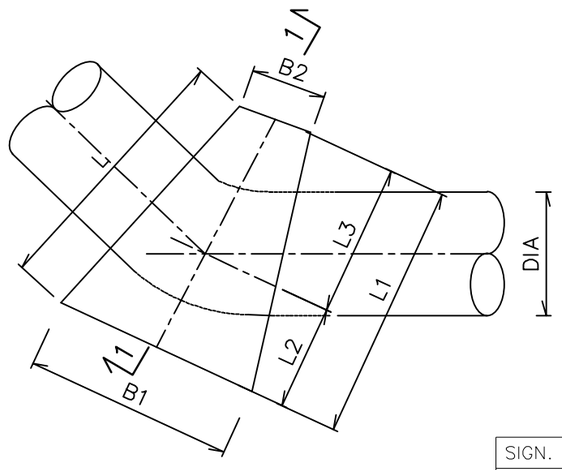

TYPICAL THRUST BLOCK

	SIGN.													
	INITIALS													
	REVISIONS													
P0	SIGN.													
	INITIALS	SM	MJ	DVP							NMS	NMS	15-04-2022
	REVISIONS													
ISSUE		DRN	DSN	CHD	CV	EL	IC	ME			PE/PM	APPD	DATE (dd-mm-yyyy)
					CLEARED								

'P' (PRELIMINARY) ISSUES ARE NOT TO BE USED FOR CONSTRUCTION / FABRICATION BUT ARE ISSUED FOR LIMITED PURPOSES ONLY AS INDICATED IN THE SMALL BLOCK ABOVE THIS BLOCK.

CONSTRUCTION / FABRICATION WORK IS PERMITTED ON 'R' (RELEASED) ISSUES ONLY.

INFORMATION CONTAINED WITHIN 'HOLD' IS NOT RELEASED FOR CONSTUCTION / FABRICATION. FIELD MUST GET DESIGN OFFICE TO CLEAR 'HOLDS' IN TIME BEFORE PROCEEDING WITH ANY CONSTRUCTION/ FABRICATION WORK RELATED TO 'HOLDS'.

SIGN. OF CLIENT:–

JE	AE	EE	SE

PURPOSE : FOR TENDER ONLY

DO NOT SCALE

Proprietary Notice and Version Control This document contains confidential information for use only by the " Client " ; for the Project under consideration, which is provided for the sole purpose of permitting the recipient to evaluate the information submitted herewith. In consideration of receipt of this document; unless agreed to in contrary in the Contract; the recipient agrees to maintain such information in confidence and to not reproduce or otherwise disclose this information to any person outside the recipient's organisation; except that there is no obligation to maintain the confidentiality of any information which was known to the recipient prior to receipt of such information from Tata Consulting Engineers Limited, or becomes publicly known through no fault of recipient, or Tata Consulting Engineers Limited, or is received without obligation of confidentiality from a third party owing no obligation of confidentiality to Tata Consulting Engineers Limited. All information given under this version over rides all and any kind of offers, assumptions, deliverables and contracts submitted verbaly (and subsequently communicated in writing) or in writing or otherwise given under any and all previous version/s.

FILE NAME 12503A–CV–30582–Rev–P0

DETAILED DESIGN CONSULTANCY, HP–SHIVA (PACKAGE CS09)

IRRIGATION, HORTICULTURE, ORCHARDS AND VALUE CHAIN DEVELOPMENT

TYPICAL DETAILS OF THRUST BLOCK

TATA CONSULTING ENGINEERS LIMITED

MUMBAI

SCALE : NTS	DWG NO. TCE.12503A–CV–3082–WS–30582		ISSUE P0
DC & DISC: DEL–CV			

SIZE:A3

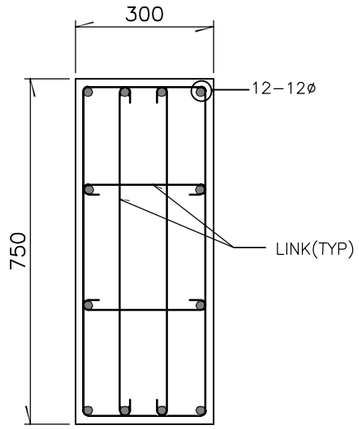

SEC 1-1

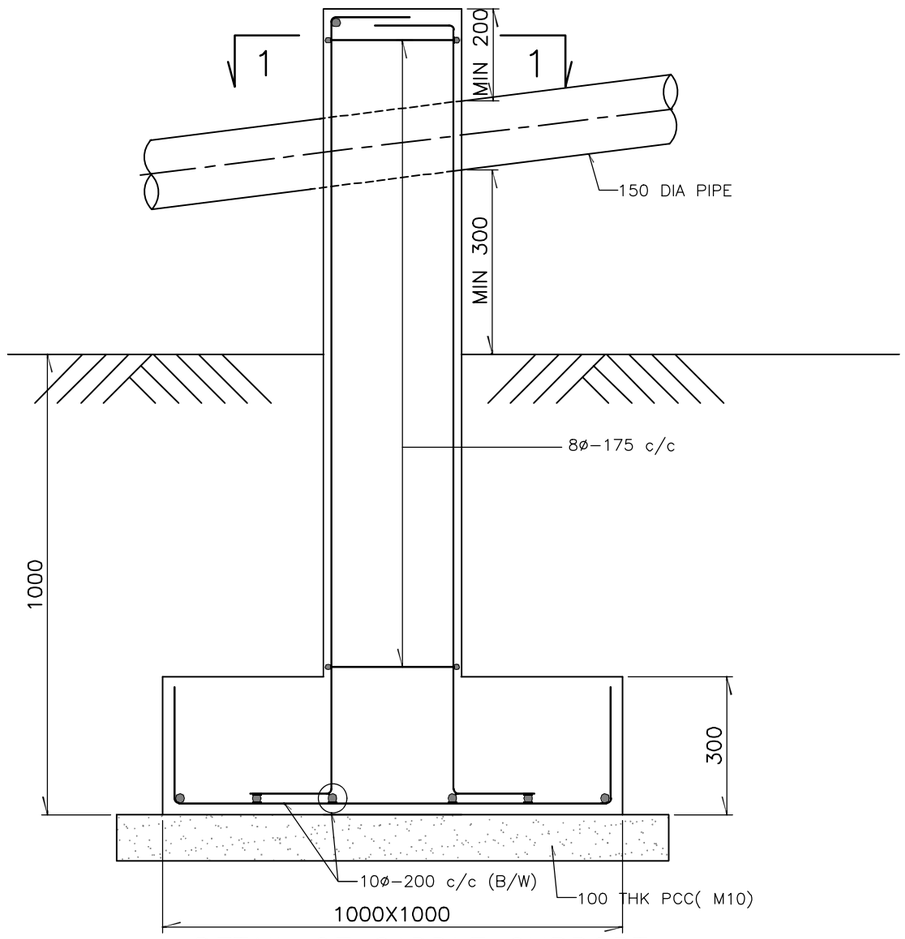

DETAIL OF SADDLE SUPPORT

LEGEND

DIA --- DIAMETER
C/C --- CENTRE TO CENTRE
THK --- THICK
B/W --- BOTHWAYS
PCC --- PLAIN CEMENT CONCRETE
TYP --- TYPICAL

NOTES:

1. ALL DIMENSIONS ARE IN MILLIMETRES AND LEVELS IN METRES UNLESS NOTED.
2. DO NOT SCALE THE DRAWING. FOLLOW FIGURED DIMENSIONS ONLY.
3. GRADE OF CONCRETE SHALL BE M30 WITH MAXIMUM 20mm DOWNGRADED AGGREGATES CONFORMING TO IS 456.
4. STEEL FOR REINFORCEMENT SHALL BE HIGH YIELD STRENGTH DEFORMED BARS OF GRADE FE-500 CONFORMING TO IS:1786.
5. SAFE BEARING CAPACITY OF SOIL IS TAKEN AS 10T/Sq.m. AT FOUNDING LEVEL AND SAME IS TO BE CONFIRMED AT SITE BEFORE EXECUTION.
6. PLAIN CEMENT CONCRETE UNDER FOUNDATION SHALL BE OF GRADE M10 CONFORMING TO IS 456.
7. IF ANY LOOSE SOIL IS ENCOUNTERED AT FOUNDING LEVEL DURING CONSTRUCTION, IT SHOULD BE BROUGHT TO THE NOTICE OF THE ENGINEER.
8. IF GROUND WATER TABLE IS ENCOUNTERED DURING CONSTRUCTION, IT SHOULD BE BROUGHT TO THE NOTICE OF THE ENGINEER FOR MAKING APPROPRIATE CHANGES IN THE DESIGN.
9. THE SPACING OF CONSTRUCTION JOINT SHALL NOT BE MORE THAN 1.20M.

	SIGN.												
	INITIALS												
	REVISIONS												
P0	SIGN.												
	INITIALS	SM	LD/AD	DVP							NMS	NMS	15-04-2022
	REVISIONS												
ISSUE		DRN	DSN	CHD	CV	EL	IC	ME			PE/PM	APPD	DATE (dd-mm-yyyy)
					CLEARED								

'P' (PRELIMINARY) ISSUES ARE NOT TO BE USED FOR CONSTRUCTION / FABRICATION BUT ARE ISSUED FOR LIMITED PURPOSES ONLY AS INDICATED IN THE SMALL BLOCK ABOVE THIS BLOCK.

CONSTRUCTION / FABRICATION WORK IS PERMITTED ON 'R' (RELEASED) ISSUES ONLY.

INFORMATION CONTAINED WITHIN 'HOLD' IS NOT RELEASED FOR CONSTUCTION / FABRICATION. FIELD MUST GET DESIGN OFFICE TO CLEAR 'HOLDS' IN TIME BEFORE PROCEEDING WITH ANY CONSTRUCTION/ FABRICATION WORK RELATED TO 'HOLDS'.

SIGN. OF CLIENT:-

JE	AE	EE	SE

PURPOSE : FOR TENDER ONLY

DO NOT SCALE

Proprietary Notice and Version Control This document contains confidential information for use only by the " Client " ; for the Project under consideration, which is provided for the sole purpose of permitting the recipient to evaluate the information submitted herewith. In consideration of receipt of this document; unless agreed to in contrary in the Contract; the recipient agrees to maintain such information in confidence and to not reproduce or otherwise disclose this information to any persons outside the recipient's organisation; except that there is no obligation to maintain the confidentiality of any information which was known to the recipient prior to receipt of such information from Tata Consulting Engineers Limited, or becomes publicly known through no fault of recipient, or Tata Consulting Engineers Limited, or is received without obligation of confidentiality from a third party owing no obligation of confidentiality to Tata Consulting Engineers Limited. All information given under this version over rides all and any kind of offers, assumptions, deliverables and contracts submitted verbally (and subsequently communicated in writing) or in writing or otherwise given under any and all previous version/s.

FILE NAME 12503A-CV-30583-Rev-P0

DETAILED DESIGN CONSULTANCY, HP-SHIVA (PACKAGE CS09)

IRRIGATION, HORTICULTURE, ORCHARDS AND VALUE CHAIN DEVELOPMENT

TYPICAL DETAIL OF SADDLE SUPPORT

TATA CONSULTING ENGINEERS LIMITED

MUMBAI

SCALE : NTS	DWG NO. TCE.12503A-CV-3082-RC-30583	ISSUE P0	SIZE-A3
DC & DISC : DEL-CV			

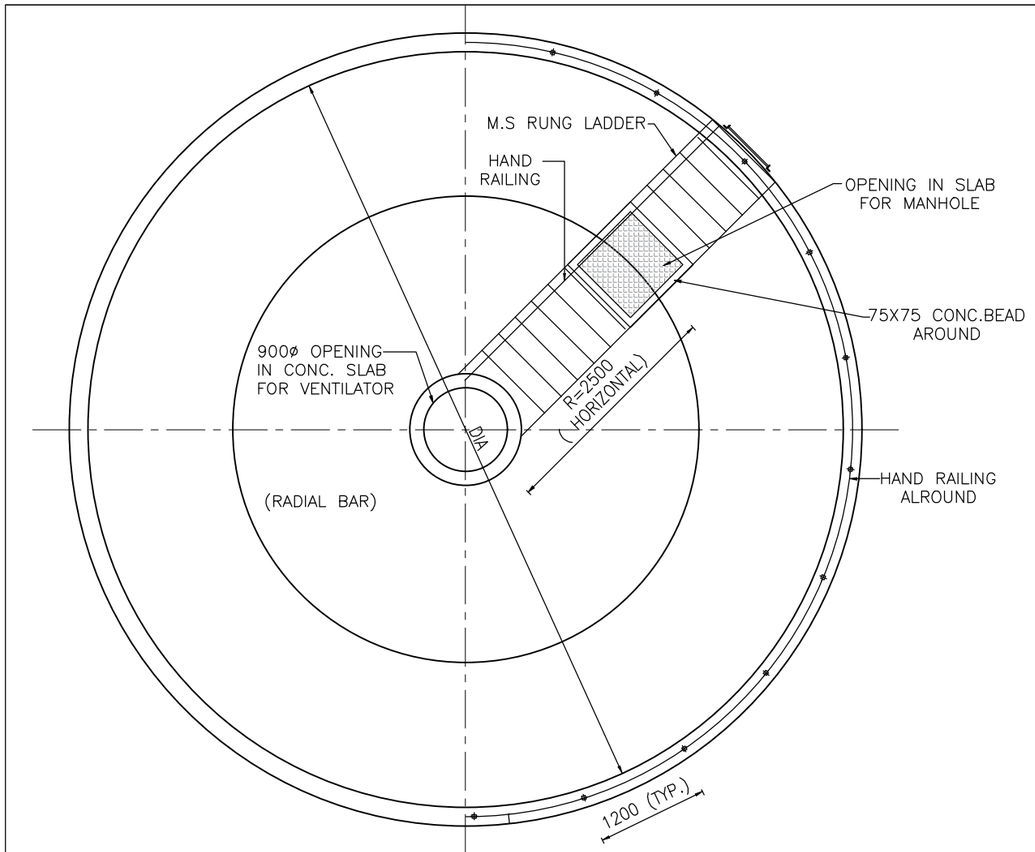

PLAN

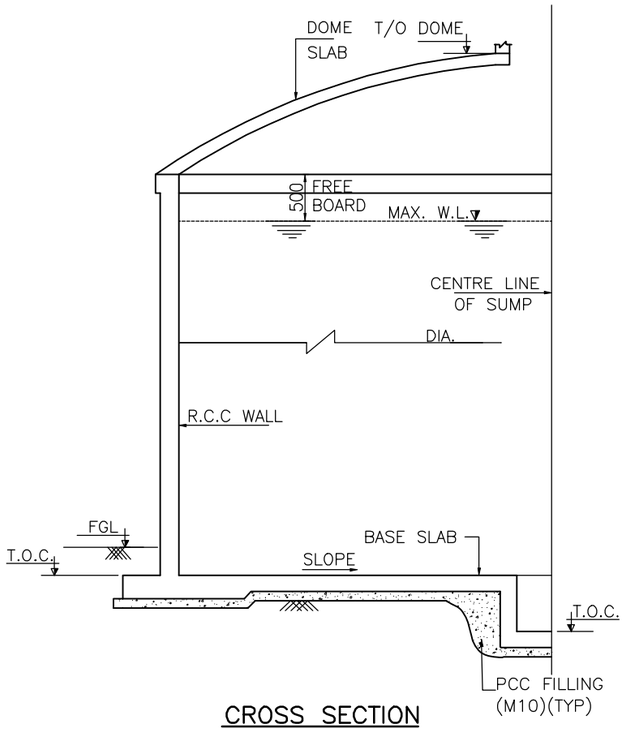

CROSS SECTION

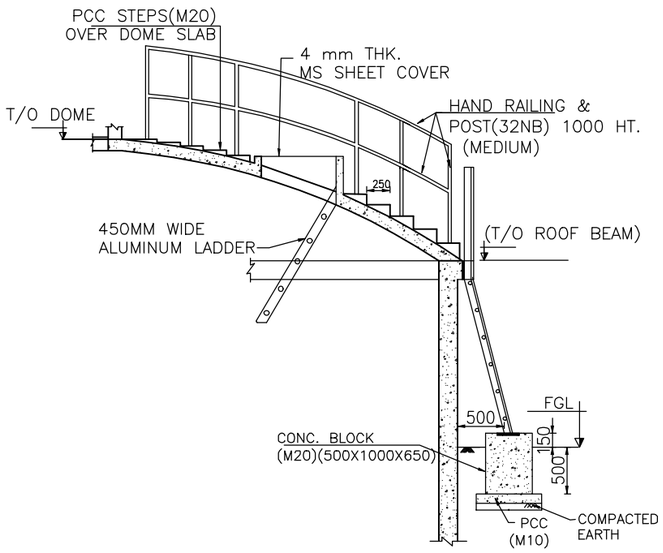

DET.OF STEPS AND M.S.RUNG LADDER

LEGEND

DIA — — — DIAMETER
R — — — RADIUS
PCC — — — PLAIN CEMENT CONCRETE
TYP — — — TYPICAL
WL — — — WATER LEVEL
M.S. — — — MILD STEEL
T/O — — — TOP OF

NOTES

1. ALL DIMENSIONS ARE IN MILLIMETRES AND LEVELS IN METRES UNLESS NOTED.
2. DO NOT SCALE THE DRAWING. FOLLOW FIGURED DIMENSIONS ONLY.
3. GRADE OF CONCRETE SHALL BE M30 WITH MAXIMUM 20mm DOWNGRADED AGGREGATES CONFORMING TO IS 456.
4. STEEL FOR REINFORCEMENT SHALL BE HIGH YIELD STRENGTH DEFORMED BARS OF GRADE FE–500 CONFORMING TO IS:1786.
5. SAFE BEARING CAPACITY OF SOIL IS TAKEN AS 10T/Sq.m. AT FOUNDING LEVEL AND SAME IS TO BE CONFIRMED AT SITE BEFORE EXECUTION.
6. PLAIN CEMENT CONCRETE UNDER FOUNDATION SHALL BE OF GRADE M10 CONFORMING TO IS 456.
7. IF ANY LOOSE SOIL IS ENCOUNTERED AT FOUNDING LEVEL DURING CONSTRUCTION, IT SHOULD BE BROUGHT TO THE NOTICE OF THE ENGINEER.
8. IF GROUND WATER TABLE IS ENCOUNTERED DURING CONSTRUCTION, IT SHOULD BE BROUGHT TO THE NOTICE OF THE ENGINEER FOR MAKING APPROPRIATE CHANGES IN THE DESIGN.
9. THE SPACING OF CONSTRUCTION JOINT SHALL NOT BE MORE THAN 1.20M.

	SIGN.													
	INITIALS													
	REVISIONS													
PO	SIGN.													
	INITIALS	AN	AD	DVP							NMS	NMS	15-04-2022	
	REVISIONS													
ISSUE		DRN	DSN	CHD	CV	EL	IC	ME			PE/PM	APPD	DATE (dd-mm-yyyy)	
					CLEARED									

'P' (PRELIMINARY) ISSUES ARE NOT TO BE USED FOR CONSTRUCTION / FABRICATION BUT ARE ISSUED FOR LIMITED PURPOSES ONLY AS INDICATED IN THE SMALL BLOCK ABOVE THIS BLOCK.

CONSTRUCTION / FABRICATION WORK IS PERMITTED ON 'R' (RELEASED) ISSUES ONLY.

INFORMATION CONTAINED WITHIN 'HOLD' IS NOT RELEASED FOR CONSTUCTION / FABRICATION. FIELD MUST GET DESIGN OFFICE TO CLEAR 'HOLDS' IN TIME BEFORE PROCEEDING WITH ANY CONSTRUCTION/ FABRICATION WORK RELATED TO 'HOLDS'.

SIGN. OF CLIENT:–

JE	AE	EE	SE

PURPOSE : FOR TENDER ONLY

DO NOT SCALE

Proprietary Notice and Version Control This document contains confidential information for use only by the " Client " ; for the Project under consideration, which is provided for the sole purpose of permitting the recipient to evaluate the information submitted herewith. In consideration of receipt of this document; unless agreed to in contrary in the Contract; the recipient agrees to maintain such information in confidence and to not reproduce or otherwise disclose this information to any person outside the recipient's organisation; except that there is no obligation to maintain the confidentiality of any information which was known to the recipient prior to receipt of such information from Tata Consulting Engineers Limited, or becomes publicly known through no fault of recipient, or Tata Consulting Engineers Limited, or is received without obligation of confidentiality from a third party owing no obligation of confidentiality to Tata Consulting Engineers Limited. All information given under this version over rides all and any kind of offers, assumptions, deliverables and contracts submitted verbally (and subsequently communicated in writing) or in writing or otherwise given under any and all previous version/s.

FILE NAME 12503A–CV–30584–Rev–P0

DETAILED DESIGN CONSULTANCY, HP–SHIVA (PACKAGE CS09)

IRRIGATION, HORTICULTURE, ORCHARDS AND VALUE CHAIN DEVELOPMENT

TYPICAL GLSR DETAILS

(1,00,000,1,50,000, 2,00,000, 2,50,000 LITRE CAPACITY)

TATA CONSULTING ENGINEERS LIMITED

MUMBAI

SCALE : NTS	DWG NO. TCE.12503A–CV–3082–GA–30584	ISSUE P0
DC & DISC: DEL–CV		

SIZE–A3

FILE NAME: F–093–Rev–R1.DWG

TCE FORM NO. 093 R1

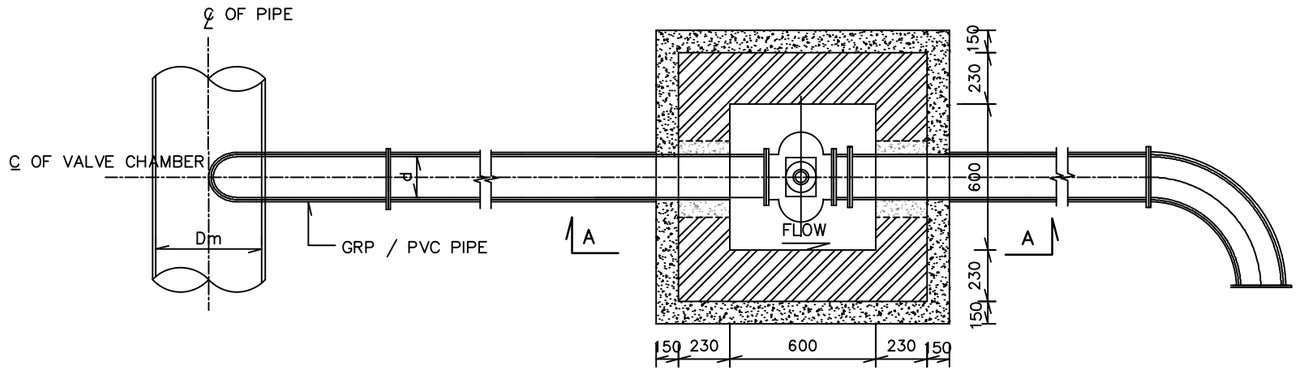

PLAN OF AIR VALVE CHAMBER

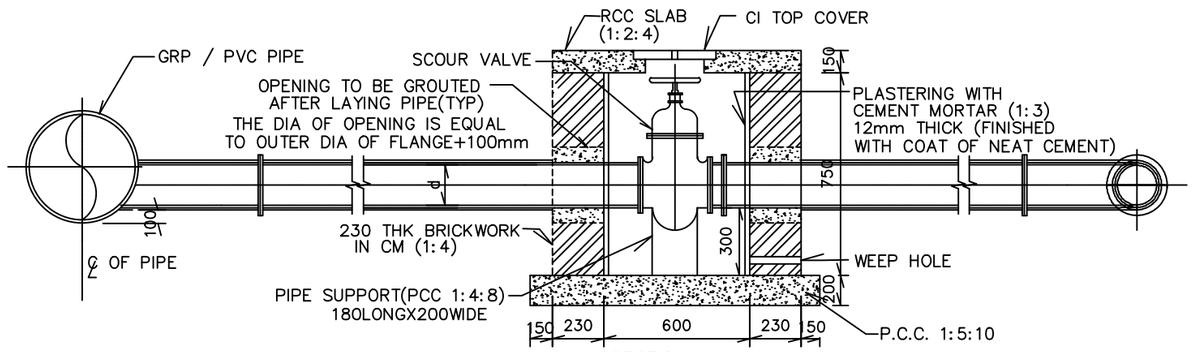

SECTION A–A

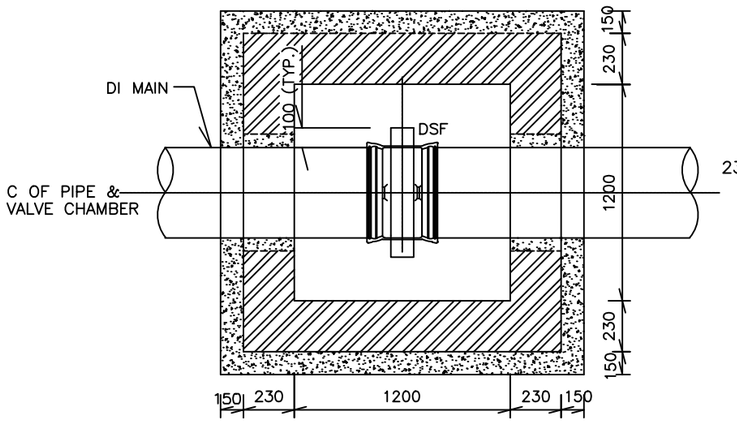

PLAN OF SCOUR VALVE CHAMBER

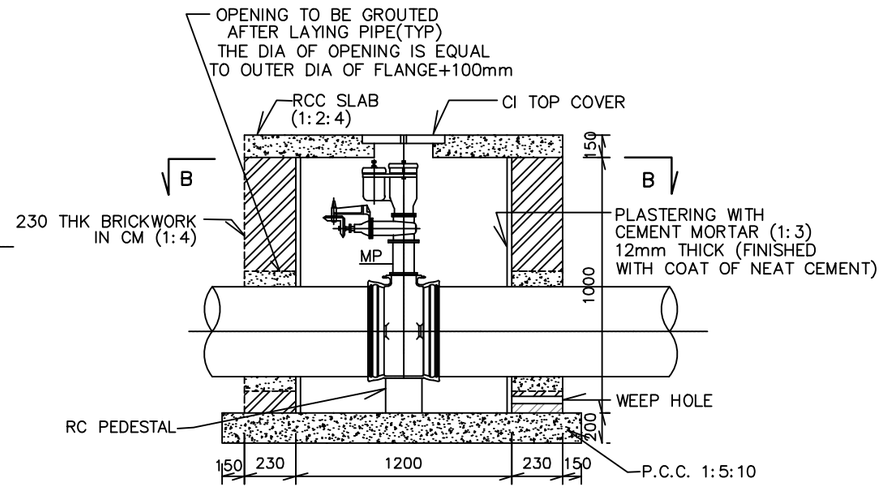

SECTION B–B

LEGEND

RCC	———	REINFORCED CEMENT CONCRETE
PCC	———	PLAIN CEMENT CONCRETE
CI	———	CAST IRON
CM	———	CEMENT MORTAR
THK	———	THICK
PVC	———	POLY VINYL CHLORIDE
Dm/d	———	INTERNAL CLEAR DIAMETER OF PIPELINE
DI	———	DUCTILE IRON
DSF	———	DOUBLE SOCKET FLANGE
℄	———	CENTER LINE
MP	———	MAKEUP PIECE

NOTES

1. ALL DIMENSIONS ARE IN MM. & LEVELS ARE IN METRES.
2. GRADE OF REINFORCEMENT CEMENT CONCRETE SHALL 1:2:4
3. THE ACTUAL GLS AND ILS OF ALL CHAMBERS SHALL BE FIXED BY THE CONTRACTOR IN CONSULTATION WITH THE ENGINEER–IN–CHARGE.
4. EXACT ORIENTATION AND LOCATION OF THE CHAMBERS SHALL BE DECIDED BY THE CONTRACTOR IN CONSULTATION WITH THE ENGINEER–IN–CHARGE.
5. CEMENT SHALL BE ORDINARY PORTLAND TYPE CONFORMING TO IS:269 UN,
6. MAXIMUM SIZE OF AGGREGATES SHALL BE 20mm DOWNGRADED FOR RAFT, WALLS, BEAMS AND SLABS.
7. BACKFILLING AROUND WALLS TO BE DONE UNIFORMLY ALL ROUND IN SUCCESSIVE LIFTS OF EQUAL HEIGHT AS PER SPECIFICATION BACKFILLING SHALL BE DONE ONLY WHEN WHEN DIRECTED BY ENGINEER.
8. ALL CONCRETE WORK SHALL BE IN ACCORDANCE WITH TENDER SPECIFICATION.
9. CHAMBER TO BE PLASTERED INTERNALLY WITH CEMENT MORTAR 1:3 IN 12MM THICKNESS.
10. GRADE OF CONCRETE SHALL BE M20 WITH MAXIMUM 20mm DOWN GRADED AGGREGATES CONFORMING TO SPECIFICATION.
11. FOR LOCATION OF VALVE CHAMBERS REFER NETWORK DISTRIBUTION DRAWING. THE CONTRACTOR SHALL OBTAIN ENGINEER'S APPROVAL FOR ALL VALVE CHAMBER LOCATIONS AND LEVELS BEFORE EXECUTION.
12. THE ARRANGEMENT RELATED TO VALVE AND FITTINGS SHOWN IN THE DRAWING ARE INDICATIVE ONLY. BEFORE CONSTRUCTION, ARRANGEMENT OF VALVE & FITTINGS SHALL BE PROVIDED BY THE CONTRACTOR TO ENGINEER FOR APPROVAL.

	SIGN.													
	INITIALS													
	REVISIONS													
	SIGN.													
P0	INITIALS	SM	MJ	DVP							NMS	NMS		15-04-2022
	REVISIONS													
ISSUE		DRN	DSN	CHD	CV	EL	IC	ME			PE/PM	APPD	DATE (dd-mm-yyyy)	
					CLEARED									

'P' (PRELIMINARY) ISSUES ARE NOT TO BE USED FOR CONSTRUCTION / FABRICATION BUT ARE ISSUED FOR LIMITED PURPOSES ONLY AS INDICATED IN THE SMALL BLOCK ABOVE THIS BLOCK.

CONSTRUCTION / FABRICATION WORK IS PERMITTED ON 'R' (RELEASED) ISSUES ONLY.

INFORMATION CONTAINED WITHIN 'HOLD' IS NOT RELEASED FOR CONSTUCTION / FABRICATION. FIELD MUST GET DESIGN OFFICE TO CLEAR 'HOLDS' IN TIME BEFORE PROCEEDING WITH ANY CONSTRUCTION/ FABRICATION WORK RELATED TO 'HOLDS'.

SIGN. OF CLIENT:–

JE	AE	EE	SE

PURPOSE : FOR TENDER ONLY

DO NOT SCALE

Proprietary Notice and Version Control This document contains confidential information for use only by the "Client"; for the Project under consideration, which is provided for the sole purpose of permitting the recipient to evaluate the information submitted herewith. In consideration of receipt of this document; unless agreed to to contrary in the Contract; the recipient agrees to maintain such information in confidence and to not reproduce or otherwise disclose this information to any persons outside the recipient's organisation; except that there is no obligation to maintain the confidentiality of any information which was known to the recipient prior to receipt of such information from Tata Consulting Engineers Limited, or becomes publicly known through no fault of recipient, or Tata Consulting Engineers Limited, or is received without obligation of confidentiality from a third party owing no obligation of confidentiality to Tata Consulting Engineers Limited. All information given under this version over rides all and any kind of offers, assumptions, deliverables and contracts submitted verbally (and subsequently communicated in writing) or in writing or otherwise given under any and all previous version/s.

FILE NAME 12503A–CV–30585–Rev–P0

DETAILED DESIGN CONSULTANCY, HP–SHIVA (PACKAGE CS09)

IRRIGATION, HORTICULTURE, ORCHARDS AND VALUE CHAIN DEVELOPMENT

TYPICAL DETAILS OF SCOUR VALVE AND AIR VALVE CHAMBER

TATA CONSULTING ENGINEERS LIMITED

MUMBAI

SCALE : NTS	DWG NO. TCE.12503A–CV–3082–WS–30585	ISSUE P0
DC & DISC: DEL–CV		

SIZE–A3

FILE NAME: F–093–Rev–R1.DWG

TCE FORM NO. 093 R1

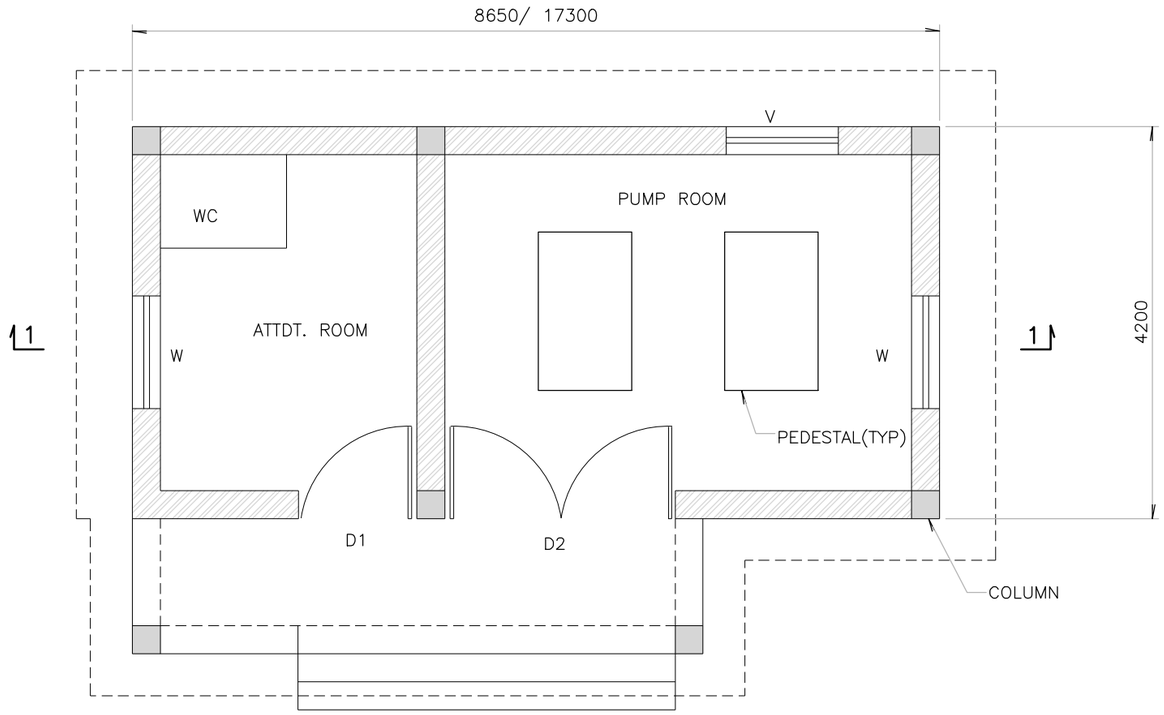

PLAN

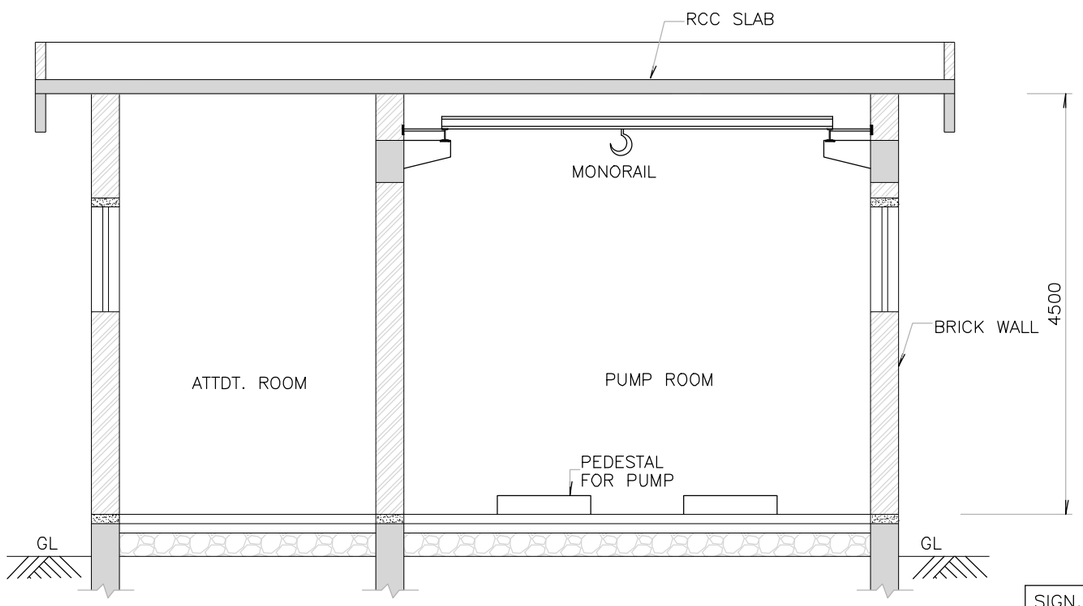

SECTION 1–1

LEGEND

ATTDT. — — — ATTENDANT
RCC — — — REINFORCED CEMENT CONCRETE
TYP — — — TYPICAL
GL — — — GROUND LEVEL

NOTES

1. ALL DIMENSIONS ARE IN MILLIMETRES AND LEVELS IN METRES UNLESS NOTED.
2. DO NOT SCALE THE DRAWING. FOLLOW FIGURED DIMENSIONS ONLY.
3. GRADE OF CONCRETE SHALL BE M20 WITH MAXIMUM 20mm DOWNGRADED AGGREGATES CONFORMING TO IS 456.
4. SAFE BEARING CAPACITY OF SOIL IS TAKEN AS 10T/Sq.m. AT FOUNDING LEVEL AND SAME IS TO BE CONFIRMED AT SITE BEFORE EXECUTION.
5. PLAIN CEMENT CONCRETE UNDER FOUNDATION SHALL BE OF GRADE M10 CONFORMING TO IS 456.
6. IF ANY LOOSE SOIL IS ENCOUNTERED AT FOUNDING LEVEL DURING CONSTRUCTION, IT SHOULD BE BROUGHT TO THE NOTICE OF THE ENGINEER.
7. IF GROUND WATER TABLE IS ENCOUNTERED DURING CONSTRUCTION, IT SHOULD BE BROUGHT TO THE NOTICE OF THE ENGINEER FOR MAKING APPROPRIATE CHANGES IN THE DESIGN.
8. THE SPACING OF CONSTRUCTION JOINT SHALL NOT BE MORE THAN 1.20M.

P1	SIGN.												08-06-2022
	INITIALS	SM	AD	DVB							MK	DK	
	REVISIONS												
P0	SIGN.												15-04-2022
	INITIALS	SM	LD/AD	DVB							MK	DK	
	REVISIONS												
ISSUE		DRN	DSN	CHD	CV	EL	IC	ME			PE/PM	APPD	DATE (dd-mm-yyyy)
					CLEARED								

'P' (PRELIMINARY) ISSUES ARE NOT TO BE USED FOR CONSTRUCTION / FABRICATION BUT ARE ISSUED FOR LIMITED PURPOSES ONLY AS INDICATED IN THE SMALL BLOCK ABOVE THIS BLOCK.

CONSTRUCTION / FABRICATION WORK IS PERMITTED ON 'R' (RELEASED) ISSUES ONLY.

INFORMATION CONTAINED WITHIN 'HOLD' IS NOT RELEASED FOR CONSTUCTION / FABRICATION. FIELD MUST GET DESIGN OFFICE TO CLEAR 'HOLDS' IN TIME BEFORE PROCEEDING WITH ANY CONSTRUCTION/ FABRICATION WORK RELATED TO 'HOLDS'.

SIGN. OF CLIENT:–

JE	AE	EE	SE

PURPOSE : FOR TENDER ONLY

DO NOT SCALE

Proprietary Notice and Version Control This document contains confidential information For use only by the "Client"; for the Project under consideration, which is provided for the sole purpose of permitting the recipient to evaluate the information submitted herewith. In consideration of receipt of this document; unless agreed to in contrary in the Contract; the recipient agrees to maintain such information in confidence and to not reproduce or otherwise disclose this information to any person outside the recipient's organisation; except that there is no obligation to maintain the confidentiality of any information which was known to the recipient prior to receipt of such information from Tata Consulting Engineers Limited, or becomes publicly known through no fault of recipient, or Tata Consulting Engineers Limited, or is received without obligation of confidentiality from a third party owing no obligation of confidentiality to Tata Consulting Engineers Limited. All information given under this version over rides all and any kind of offers, assumptions, deliverables and contracts submitted verbally (and subsequently communicated in writing) or in writing or otherwise given under any and all previous version/s.

FILE NAME 12503A–CV–30586–Rev–P1

DETAILED DESIGN CONSULTANCY, HP–SHIVA (PACKAGE CS09)

IRRIGATION, HORTICULTURE, ORCHARDS AND VALUE CHAIN DEVELOPMENT

TYPICAL DETAILS OF PUMP HOUSE

TATA CONSULTING ENGINEERS LIMITED

MUMBAI

SCALE : NTS	DWG NO. TCE.12503A–CV–3082–GA–30586	ISSUE P1	SIZE–A3
DC & DISC : DEL–CV			

FILE NAME: F-093-Rev-R1.DWG

TCE FORM NO. 093 R1

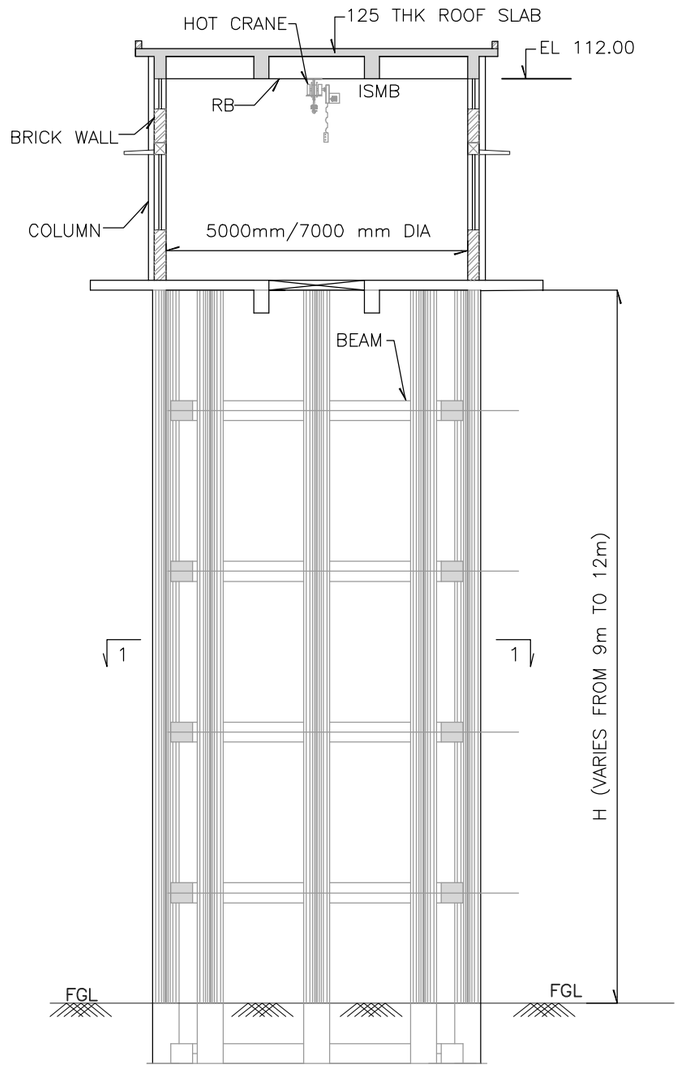

SECTION ELEVATION

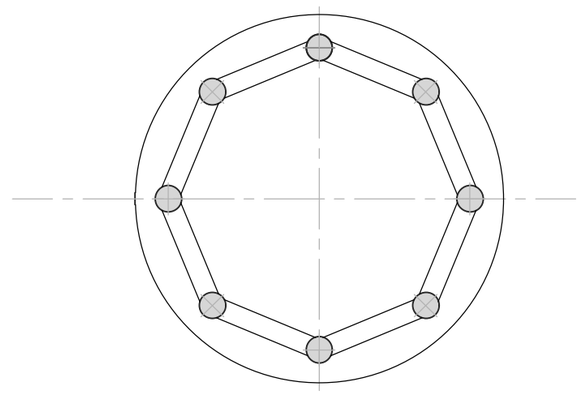

SECTIONAL PLAN
SEC 1–1

LEGEND:

DIA---- DIAMETER
H----- STAGE HEIGHT
THK---- THICKNESS
FGL-----FINISHED GROUND LEVEL
RB----- ROOF BEAM

NOTES:

1. ALL DIMENSIONS ARE IN MILLIMETRES AND LEVELS IN METRES UNLESS NOTED.
2. DO NOT SCALE THE DRAWING. FOLLOW FIGURED DIMENSIONS ONLY.
3. GRADE OF CONCRETE SHALL BE M30 WITH MAXIMUM 20mm DOWNGRADED AGGREGATES CONFORMING TO IS 456.
4. STEEL FOR REINFORCEMENT SHALL BE HIGH YIELD STRENGTH DEFORMED BARS OF GRADE FE–500 CONFORMING TO IS:1786.
5. SAFE BEARING CAPACITY OF SOIL IS TAKEN AS 10T/Sq.m. AT FOUNDING LEVEL AND SAME IS TO BE CONFIRMED AT SITE BEFORE EXECUTION.
6. PLAIN CEMENT CONCRETE UNDER FOUNDATION SHALL BE OF GRADE M10 CONFORMING TO IS 456.
7. IF ANY LOOSE SOIL IS ENCOUNTERED AT FOUNDING LEVEL DURING CONSTRUCTION, IT SHOULD BE BROUGHT TO THE NOTICE OF THE ENGINEER.
8. IF GROUND WATER TABLE IS ENCOUNTERED DURING CONSTRUCTION, IT SHOULD BE BROUGHT TO THE NOTICE OF THE ENGINEER FOR MAKING APPROPRIATE CHANGES IN THE DESIGN.
9. THE SPACING OF CONSTRUCTION JOINT SHALL NOT BE MORE THAN 1.20M.

P1	SIGN.												27-05-2022
	INITIALS	SM	LD/AD	DVP							NMS	NMS	
	REVISIONS	AS PER CLIENT OBSERVATION											
P0	SIGN.												15-04-2022
	INITIALS	SM	LD/AD	DVP							NMS	NMS	
	REVISIONS												
ISSUE		DRN	DSN	CHD	CV	EL	IC	ME			PE/PM	APPD	DATE (dd-mm-yyyy)
					CLEARED								

'P' (PRELIMINARY) ISSUES ARE NOT TO BE USED FOR CONSTRUCTION / FABRICATION BUT ARE ISSUED FOR LIMITED PURPOSES ONLY AS INDICATED IN THE SMALL BLOCK ABOVE THIS BLOCK.

CONSTRUCTION / FABRICATION WORK IS PERMITTED ON 'R' (RELEASED) ISSUES ONLY.

INFORMATION CONTAINED WITHIN 'HOLD' IS NOT RELEASED FOR CONSTUCTION / FABRICATION. FIELD MUST GET DESIGN OFFICE TO CLEAR 'HOLDS' IN TIME BEFORE PROCEEDING WITH ANY CONSTRUCTION/ FABRICATION WORK RELATED TO 'HOLDS'.

SIGN. OF CLIENT:–

JE	AE	EE	SE

PURPOSE : FOR TENDER ONLY

DO NOT SCALE

Proprietary Notice and Version Control This document contains confidential information for use only by the " Client " ; for the Project under consideration, which is provided for the sole purpose of permitting the recipient to evaluate the information submitted herewith. In consideration of receipt of this document; unless agreed to in contrary in the Contract; the recipient agrees to maintain such information in confidence and to not reproduce or otherwise disclose this information to any person outside the recipient's organisation; except that there is no obligation to maintain the confidentiality of any information which was known to the recipient prior to receipt of such information from Tata Consulting Engineers Limited, or becomes publicly known through no fault of recipient, or Tata Consulting Engineers Limited, or is received without obligation of confidentiality from a third party owing no obligation of confidentiality to Tata Consulting Engineers Limited. All information given under this version over rides all and any kind of offers, assumptions, deliverables and contracts submitted verbally (and subsequently communicated in writing) or in writing or otherwise given under any and all previous version/s.

FILE NAME 12503A–CV–30587–Rev–P1

DETAILED DESIGN CONSULTANCY, HP–SHIVA (PACKAGE CS09)

IRRIGATION, HORTICULTURE, ORCHARDS AND VALUE CHAIN DEVELOPMENT

GENERAL ARRANGEMENT OF INTAKE WELL

TATA CONSULTING ENGINEERS LIMITED
MUMBAI

SCALE : NTS	DWG NO. TCE.12503A–CV–3082–GA–30587	ISSUE P1
DC & DISC: DEL–CV		

SIZE–A3

FILE NAME: F–093–Rev–R1.DWG

TCE FORM NO. 093 R1