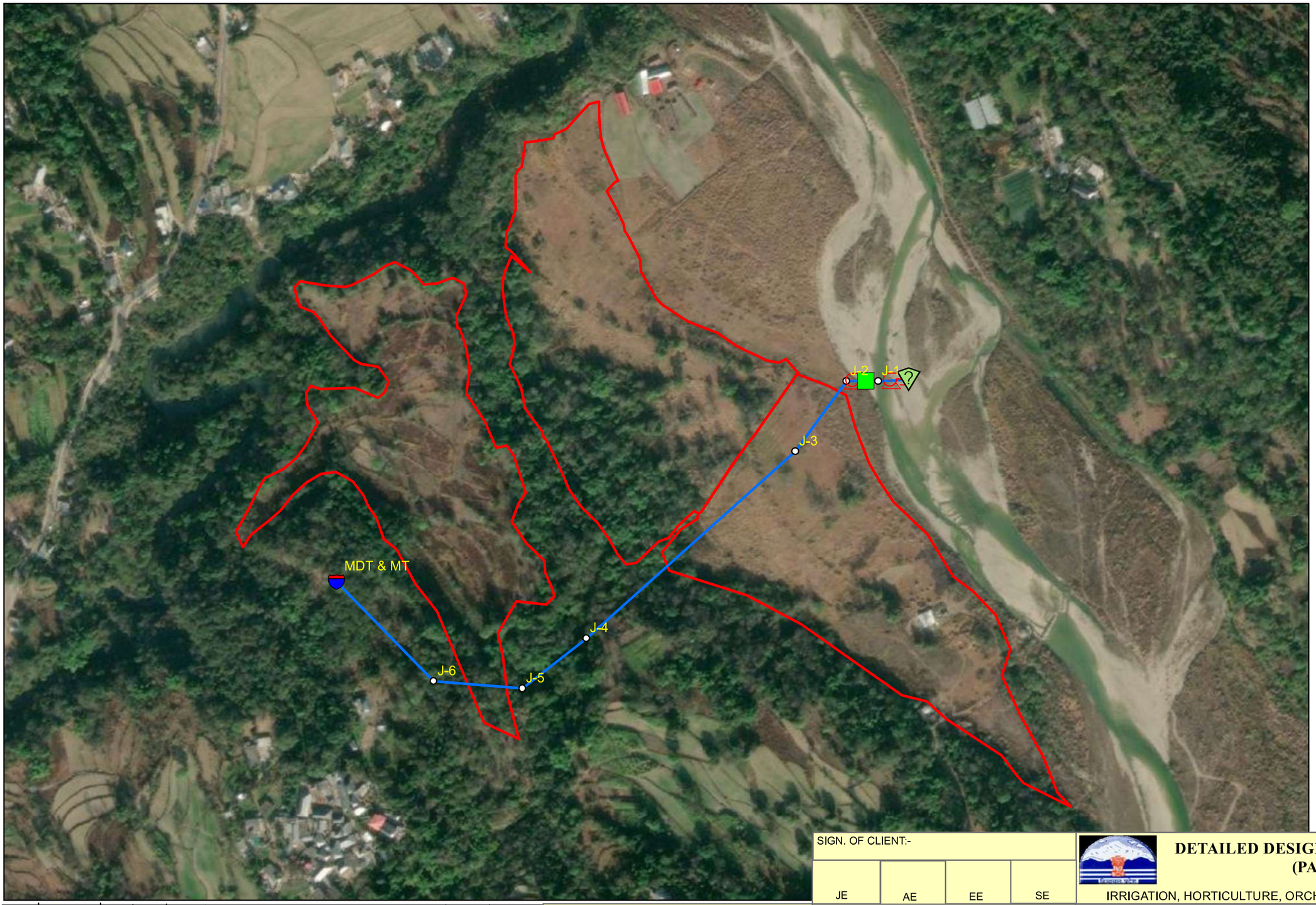


N
W E
S

## Legend

- Source
- R-2
- Pump
- MDT_MT
- Junction
- Rising Main 100mm Dia GI Pipe
- TANG_BALOH

SIGN. OF CLIENT:-

| JE | AE | EE | SE |
|---|---|---|---|
| | | | |

**DETAILED DESIGN CONSULTANCY, HP-SHIVA (PACKAGE CS09)**

IRRIGATION, HORTICULTURE, ORCHARDS AND VALUE CHAIN DEVELOPMENT

| | | | | | | | | | | |
|---|---|---|---|---|---|---|---|---|---|---|
| | SIGN. | | | | | | | | | |
| | INITIALS | | | | | | | | | |
| | REVISIONS | | | | | | | | | |
| P0 | SIGN. | | | | | | | | | |
| | INITIALS | GKJ | DG | DVB | | | MK | DK | | 24-06-2022 |
| | REVISIONS | | | | | | | | | |
| ISSUE | | DRN | DSN | CHD | CV | EL | IC | ME | PE/PM | APPD. | DATE |
| | | | | | CLEARED | | | | | | |

'P' (PRELIMINARY) ISSUES ARE NOT TO BE USED FOR CONSTRUCTION / FABRICATION BUT ARE ISSUED FOR LIMITED PURPOSES ONLY AS INDICATED IN THE SMALL BLOCK ABOVE THIS BLOCK.

CONSTRUCTION / FABRICATION WORK IS PERMITTED ON 'R' (RELEASED) ISSUES ONLY.

INFORMATION CONTAINED WITHIN 'HOLD' IS NOT RELEASED FOR CONSTUCTION / FABRICATION. FIELD MUST GET DESIGN OFFICE TO CLEAR 'HOLDS' IN TIME BEFORE PROCEEDING WITH ANY CONSTRUCTION/FABRICATION WORK RELATED TO 'HOLDS'.

**PURPOSE: FOR TENDER ONLY**

Proprietary Notice and Version Control This document contains confidential information for use only by the " Client " ; for the Project under consideration, which is provided for the sole purpose of permitting the recipient to evaluate the information submitted here with.In consideration of receipt of this document; unless agreed to in contrary in the Contract; the recipient agrees to maintain such information in confidence and to not reproduce or otherwise disclose this information to any person outside the recipient's organisation; except that there is no obligation to maintain the confidentiality of any information which was known to the recipient prior to receipt of such information from Tata Consulting Engineers Limited, or becomes publicly known through no fault of recipient, or Tata Consulting Engineers Limited, or is received without obligation of confidentiality from a third party owing no obligation of confidentiality to Tata Consulting Engineers Limited. All information given under this version over rides all and any kind of offers, assumptions, deliverables and contracts submitted verbally (and subsequently communicated in writing) or in writing or otherwise given under any and all previous version/s.

File Name: 12503A-CV-33215-Rev-P0

TITLE:- NETWORK DRAWING OF LIS MANN KHAD (TUNG - BALOH CLUSTER) FOR NADAUN BLOCK, HAMIRPUR DISTRICT.

**TATA**CONSULTING ENGINEERS LIMITED. MUMBAI

SCALE:- 1:4,000

DL.CEN.:- DEL-CV

DWG. No:- TCE.12503A-CV -3082-WS-33215

ISSUE:- P0

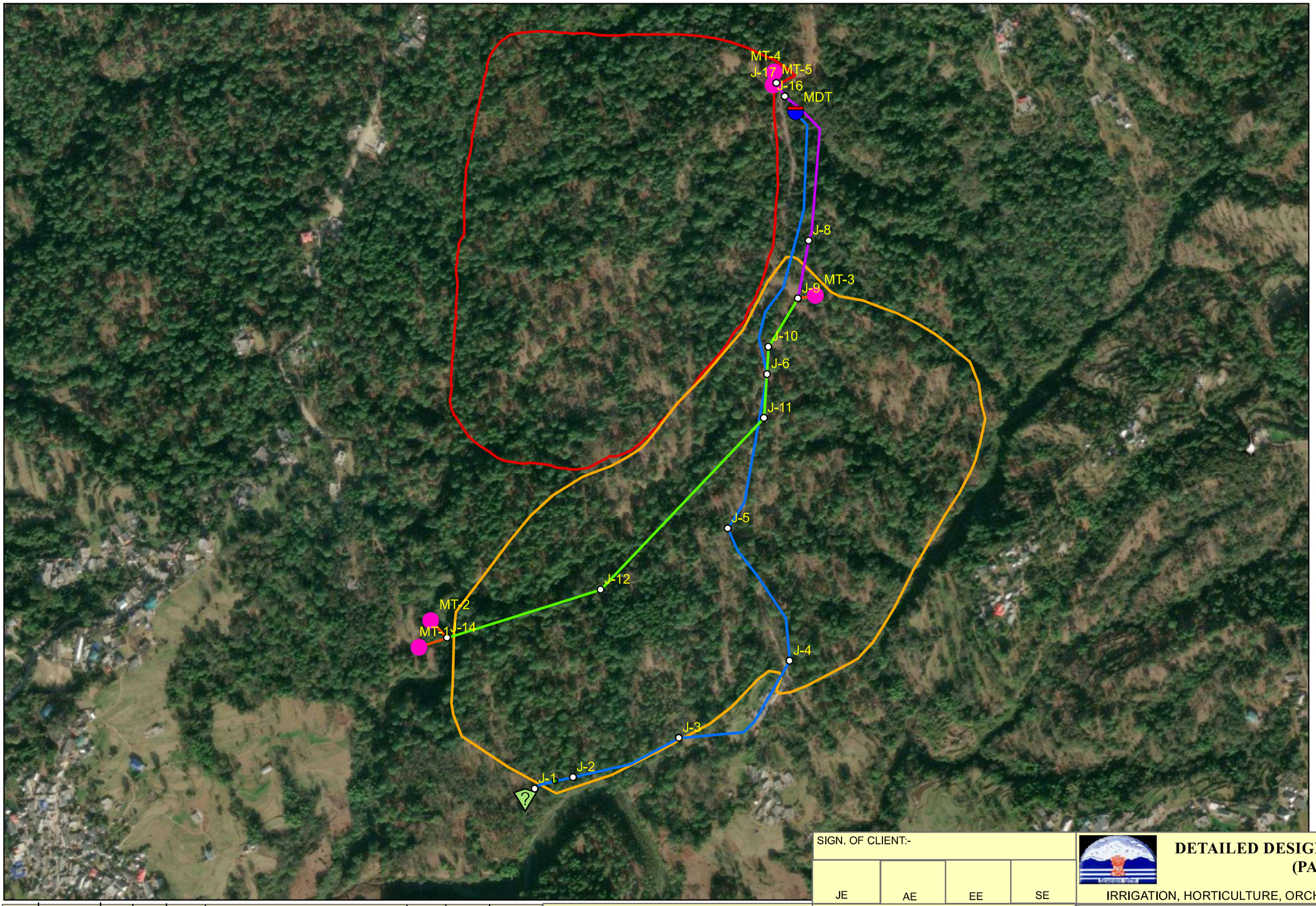


| | | | | | | | | | |
|---|---|---|---|---|---|---|---|---|---|
| | SIGN. | | | | | | | | |
| | INITIALS | | | | | | | | |
| | REVISIONS | | | | | | | | |
| P0 | SIGN. | | | | | | | | |
| | INITIALS | GKJ | DG | DVB | | MK | DK | 24-06-2022 | |
| | REVISIONS | | | | | | | | |
| ISSUE | | DRN | DSN | CHD | CV EL IC ME CLEARED | PE/PM | APPD. | DATE | |

'P' (PRELIMINARY) ISSUES ARE NOT TO BE USED FOR CONSTRUCTION / FABRICATION BUT ARE ISSUED FOR LIMITED PURPOSES ONLY AS INDICATED IN THE SMALL BLOCK ABOVE THIS BLOCK.

CONSTRUCTION / FABRICATION WORK IS PERMITTED ON 'R' (RELEASED) ISSUES ONLY.

INFORMATION CONTAINED WITHIN 'HOLD' IS NOT RELEASED FOR CONSTUCTION / FABRICATION. FIELD MUST GET DESIGN OFFICE TO CLEAR 'HOLDS' IN TIME BEFORE PROCEEDING WITH ANY CONSTRUCTION/FABRICATION WORK RELATED TO 'HOLDS'.

SIGN. OF CLIENT:-

| JE | AE | EE | SE |
|---|---|---|---|

**PURPOSE: FOR TENDER ONLY**

Proprietary Notice and Version Control This document contains confidential information for use only by the " Client " ; for the Project under consideration, which is provided for the sole purpose of permitting the recipient to evaluate the information submitted here with.In consideration of receipt of this document; unless agreed to in contrary in the Contract; the recipient agrees to maintain such information in confidence and to not reproduce or otherwise disclose this information to any person outside the recipient's organisation; except that there is no obligation to maintain the confidentiality of any information which was known to the recipient prior to receipt of such information from Tata Consulting Engineers Limited, or becomes publicly known through no fault of recipient, or Tata Consulting Engineers Limited, or is received without obligation of confidentiality from a third party owing no obligation of confidentiality to Tata Consulting Engineers Limited, All information given under this version over rides all and any kind of offers, assumptions, deliverables and contracts submitted verbally (and subsequently communicated in writing) or in writing or otherwise given under any and all previous version/s.

File Name: 12503A-CV-33216-Rev-P0

**DETAILED DESIGN CONSULTANCY, HP-SHIVA (PACKAGE CS09)**

IRRIGATION, HORTICULTURE, ORCHARDS AND VALUE CHAIN DEVELOPMENT

TITLE:- NETWORK DRAWING OF LIS PANSAI (PANSAI - 1 & 2 CLUSTER) FOR NADAUN BLOCK, HAMIRPUR DISTRICT.

**TATA**CONSULTING ENGINEERS LIMITED. MUMBAI

SCALE:- 1:6,500

DL.CEN.:- DEL-CV

DWG. No:- TCE.12503A-CV -3082-WS-33216

ISSUE:- P0

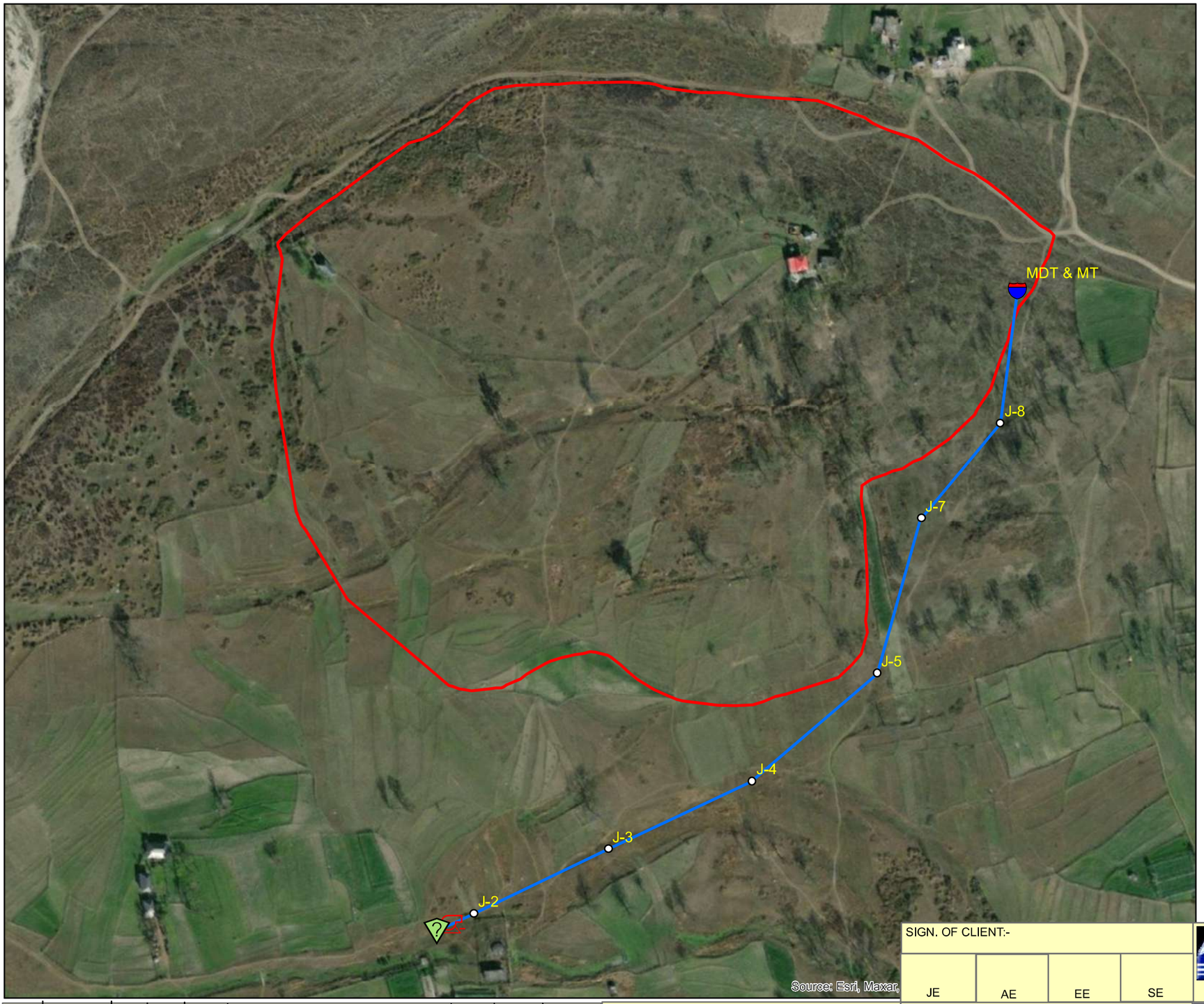


N
W E
S

## Legend

- Reservoir
- Pump
- MDT_MT
- Junction
- Rising Main 80mm Dia GI Pipe
- KHERI

| | | | | | | | | | | |
|---|---|---|---|---|---|---|---|---|---|---|
| | SIGN. | | | | | | | | | |
| | INITIALS | | | | | | | | | |
| | REVISIONS | | | | | | | | | |
| P0 | SIGN. | | | | | | | | | |
| | INITIALS | GKJ | DG | DVB | | | MK | DK | | 24-06-2022 |
| | REVISIONS | | | | | | | | | |
| ISSUE | | DRN | DSN | CHD | CV | EL | IC | ME | PE/PM | APPD. | DATE |
| | | | | | CLEARED | | | | | | |

'P' (PRELIMINARY) ISSUES ARE NOT TO BE USED FOR CONSTRUCTION / FABRICATION BUT ARE ISSUED FOR LIMITED PURPOSES ONLY AS INDICATED IN THE SMALL BLOCK ABOVE THIS BLOCK.

CONSTRUCTION / FABRICATION WORK IS PERMITTED ON 'R' (RELEASED) ISSUES ONLY.

INFORMATION CONTAINED WITHIN 'HOLD' IS NOT RELEASED FOR CONSTUCTION / FABRICATION. FIELD MUST GET DESIGN OFFICE TO CLEAR 'HOLDS' IN TIME BEFORE PROCEEDING WITH ANY CONSTRUCTION/FABRICATION WORK RELATED TO 'HOLDS'.

SIGN. OF CLIENT:-

| JE | AE | EE | SE |
|---|---|---|---|
| | | | |

**PURPOSE: FOR TENDER ONLY**

Proprietary Notice and Version Control This document contains confidential information for use only by the " Client " ; for the Project under consideration, which is provided for the sole purpose of permitting the recipient to evaluate the information submitted here with.In consideration of receipt of this document; unless agreed to in contrary in the Contract; the recipient agrees to maintain such information in confidence and to not reproduce or otherwise disclose this information to any person outside the recipient's organisation; except that there is no obligation to maintain the confidentiality of any information which was known to the recipient prior to receipt of such information from Tata Consulting Engineers Limited, or becomes publicly known through no fault of recipient, or Tata Consulting Engineers Limited, or is received without obligation of confidentiality from a third party owing no obligation of confidentiality to Tata Consulting Engineers Limited. All information given under this version over rides all and any kind of offers, assumptions, deliverables and contracts submitted verbally (and subsequently communicated in writing) or in writing or otherwise given under any and all previous version/s.

File Name: 12503A-CV-33217-Rev-P0

**DETAILED DESIGN CONSULTANCY, HP-SHIVA (PACKAGE CS09)**

IRRIGATION, HORTICULTURE, ORCHARDS AND VALUE CHAIN DEVELOPMENT

TITLE:-

NETWORK DRAWING OF LIS KHERI FOR SUJANPUR BLOCK, HAMIRPUR DISTRICT.

**TATA**CONSULTING ENGINEERS LIMITED.
MUMBAI

SCALE:- 1:3,000

DL.CEN.:- DEL-CV

DWG. No:- TCE.12503A-CV -3082-WS-33217

ISSUE:- P0

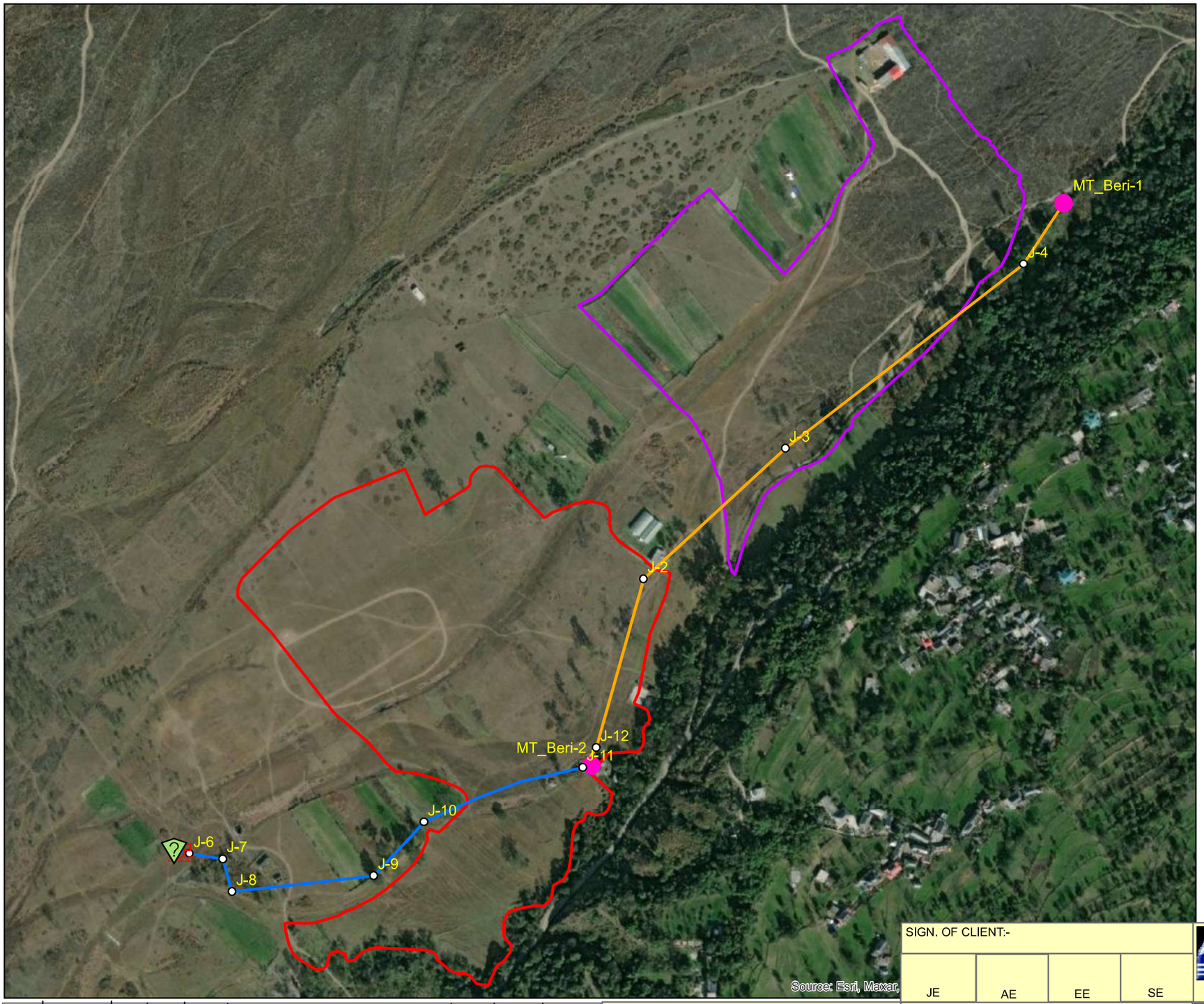


N
W E
S

## Legend

- Reservoir
- Pump
- Junction
- MT
- Rising Main 80mm Dia GI Pipe
- Rising Main 100mm Dia GI Pipe
- BERI-1
- BERI-2

| | | | | | | | | | | |
|---|---|---|---|---|---|---|---|---|---|---|
| | SIGN. | | | | | | | | | |
| | INITIALS | | | | | | | | | |
| | REVISIONS | | | | | | | | | |
| P0 | SIGN. | | | | | | | | | |
| | INITIALS | GKJ | DG | DVB | | | MK | DK | | 24-06-2022 |
| | REVISIONS | | | | | | | | | |
| ISSUE | | DRN | DSN | CHD | CV | EL | IC | ME | PE/PM | APPD. | DATE |
| | | | | | CLEARED | | | | | | |

'P' (PRELIMINARY) ISSUES ARE NOT TO BE USED FOR CONSTRUCTION / FABRICATION BUT ARE ISSUED FOR LIMITED PURPOSES ONLY AS INDICATED IN THE SMALL BLOCK ABOVE THIS BLOCK.

CONSTRUCTION / FABRICATION WORK IS PERMITTED ON 'R' (RELEASED) ISSUES ONLY.

INFORMATION CONTAINED WITHIN 'HOLD' IS NOT RELEASED FOR CONSTUCTION / FABRICATION. FIELD MUST GET DESIGN OFFICE TO CLEAR 'HOLDS' IN TIME BEFORE PROCEEDING WITH ANY CONSTRUCTION/FABRICATION WORK RELATED TO 'HOLDS'.

SIGN. OF CLIENT:-

| JE | AE | EE | SE |
|---|---|---|---|

**PURPOSE: FOR TENDER ONLY**

Proprietary Notice and Version Control This document contains confidential information for use only by the " Client " ; for the Project under consideration, which is provided for the sole purpose of permitting the recipient to evaluate the information submitted here with.In consideration of receipt of this document; unless agreed to in contrary in the Contract; the recipient agrees to maintain such information in confidence and to not reproduce or otherwise disclose this information to any person outside the recipient's organisation; except that there is no obligation to maintain the confidentiality of any information which was known to the recipient prior to receipt of such information from Tata Consulting Engineers Limited, or becomes publicly known through no fault of recipient, or Tata Consulting Engineers Limited, or is received without obligation of confidentiality from a third party owing no obligation of confidentiality to Tata Consulting Engineers Limited. All information given under this version over rides all and any kind of offers, assumptions, deliverables and contracts submitted verbally (and subsequently communicated in writing) or in writing or otherwise given under any and all previous version/s.

File Name: 12503A-CV-33218-Rev-P0

**DETAILED DESIGN CONSULTANCY, HP-SHIVA (PACKAGE CS09)**

IRRIGATION, HORTICULTURE, ORCHARDS AND VALUE CHAIN DEVELOPMENT

TITLE:- NETWORK DRAWING OF LIS KUDANA BERI (BERI-1 & BERI-2) FOR SUJANPUR BLOCK, HAMIRPUR DISTRICT.

**TATA**CONSULTING ENGINEERS LIMITED. MUMBAI

SCALE:- 1:5,000

DL.CEN.:- DEL-CV

DWG. No:- TCE.12503A-CV -3082-WS-33218

ISSUE:- P0

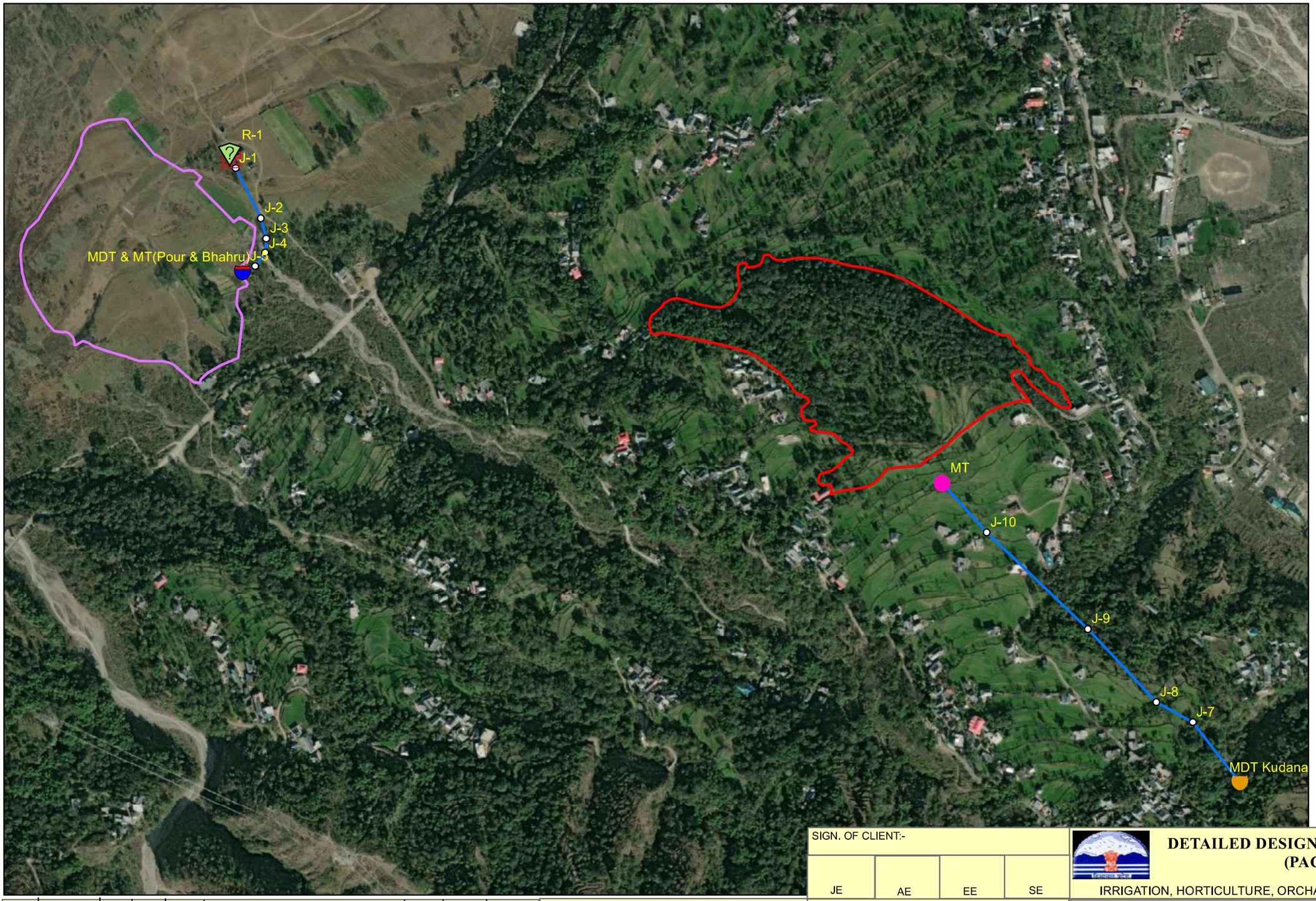


N
W E
S

## Legend

- Source
- MDT Kudana
- Pump
- MDT_MT
- MT
- Junction
- Rising Main 80mm Dia GI Pipe
- Kudana
- Baharu_or_Paur

| | | | | | | | | | | | |
|---|---|---|---|---|---|---|---|---|---|---|---|
| | SIGN. | | | | | | | | | | |
| | INITIALS | | | | | | | | | | |
| | REVISIONS | | | | | | | | | | |
| P0 | SIGN. | | | | | | | | | | |
| | INITIALS | GKJ | DG | DVB | | | | MK | DK | | 24-06-2022 |
| | REVISIONS | | | | | | | | | | |
| ISSUE | | DRN | DSN | CHD | CV | EL | IC | ME | | PE/PM | APPD. | DATE |
| | | | | | CLEARED | | | | | | |

'P' (PRELIMINARY) ISSUES ARE NOT TO BE USED FOR CONSTRUCTION / FABRICATION BUT ARE ISSUED FOR LIMITED PURPOSES ONLY AS INDICATED IN THE SMALL BLOCK ABOVE THIS BLOCK.

CONSTRUCTION / FABRICATION WORK IS PERMITTED ON 'R' (RELEASED) ISSUES ONLY.

INFORMATION CONTAINED WITHIN 'HOLD' IS NOT RELEASED FOR CONSTUCTION / FABRICATION. FIELD MUST GET DESIGN OFFICE TO CLEAR 'HOLDS' IN TIME BEFORE PROCEEDING WITH ANY CONSTRUCTION/FABRICATION WORK RELATED TO 'HOLDS'.

SIGN. OF CLIENT:-

| JE | AE | EE | SE |
|---|---|---|---|

**PURPOSE: FOR TENDER ONLY**

Proprietary Notice and Version Control This document contains confidential information for use only by the " Client " ; for the Project under consideration, which is provided for the sole purpose of permitting the recipient to evaluate the information submitted here with.In consideration of receipt of this document; unless agreed to in contrary in the Contract; the recipient agrees to maintain such information in confidence and to not reproduce or otherwise disclose this information to any person outside the recipient's organisation; except that there is no obligation to maintain the confidentiality of any information which was known to the recipient prior to receipt of such information from Tata Consulting Engineers Limited, or becomes publicly known through no fault of recipient, or Tata Consulting Engineers Limited, or is received without obligation of confidentiality from a third party owing no obligation of confidentiality to Tata Consulting Engineers Limited. All information given under this version over rides all and any kind of offers, assumptions, deliverables and contracts submitted verbally (and subsequently communicated in writing) or in writing or otherwise given under any and all previous version/s.

File Name: 12503A-CV-33219-Rev-P0

**DETAILED DESIGN CONSULTANCY, HP-SHIVA (PACKAGE CS09)**

IRRIGATION, HORTICULTURE, ORCHARDS AND VALUE CHAIN DEVELOPMENT

TITLE:- NETWORK DRAWING OF LIS BHAHRU JATOUR (BHAHRU - PAUR, KUDANA) FOR SUJANPUR BLOCK, HAMIRPUR DISTRICT.

**TATA**CONSULTING ENGINEERS LIMITED.
MUMBAI

SCALE:- 1:6,000

DL.CEN.:- DEL-CV

DWG. No:- TCE.12503A-CV -3082-WS-33219

ISSUE:- P0

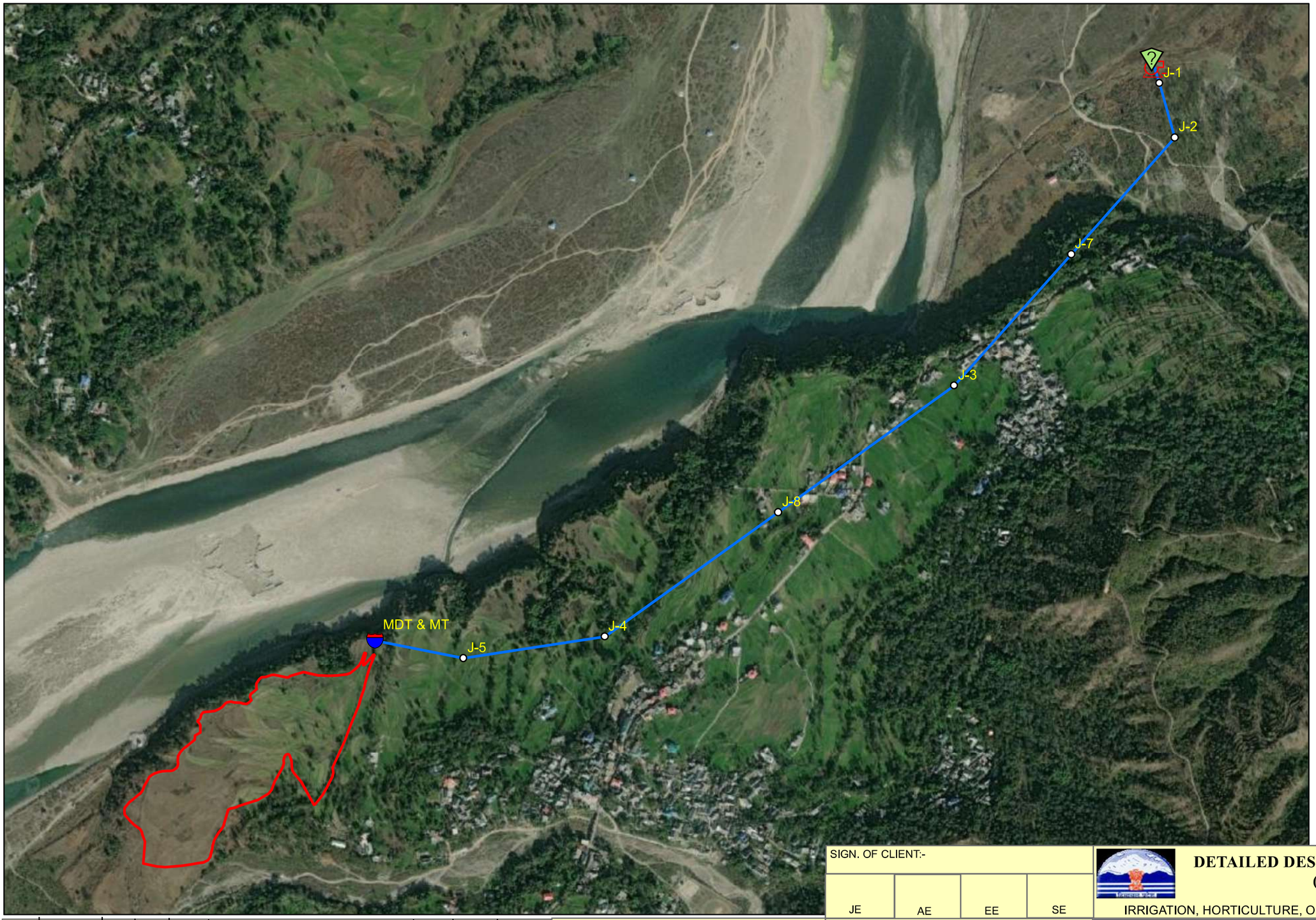


N
W E
S

## Legend

- Reservoir
- Pump
- MDT_MT
- Junction
- Rising Main 80mm Dia GI Pipe
- Bir_Baghera

SIGN. OF CLIENT:-

| JE | AE | EE | SE |
|---|---|---|---|
| | | | |

**DETAILED DESIGN CONSULTANCY, HP-SHIVA (PACKAGE CS09)**

IRRIGATION, HORTICULTURE, ORCHARDS AND VALUE CHAIN DEVELOPMENT

| | | | | | | | | | |
|---|---|---|---|---|---|---|---|---|---|
| | SIGN. | | | | | | | | |
| | INITIALS | | | | | | | | |
| | REVISIONS | | | | | | | | |
| P0 | SIGN. | | | | | | | | |
| | INITIALS | GKJ | DG | DVB | | MK | DK | | 24-06-2022 |
| | REVISIONS | | | | | | | | |
| ISSUE | | DRN | DSN | CHD | CV / EL / IC / ME / CLEARED | PE/PM | APPD. | | DATE |

'P' (PRELIMINARY) ISSUES ARE NOT TO BE USED FOR CONSTRUCTION / FABRICATION BUT ARE ISSUED FOR LIMITED PURPOSES ONLY AS INDICATED IN THE SMALL BLOCK ABOVE THIS BLOCK.

CONSTRUCTION / FABRICATION WORK IS PERMITTED ON 'R' (RELEASED) ISSUES ONLY.

INFORMATION CONTAINED WITHIN 'HOLD' IS NOT RELEASED FOR CONSTUCTION / FABRICATION. FIELD MUST GET DESIGN OFFICE TO CLEAR 'HOLDS' IN TIME BEFORE PROCEEDING WITH ANY CONSTRUCTION/FABRICATION WORK RELATED TO 'HOLDS'.

**PURPOSE: FOR TENDER ONLY**

Proprietary Notice and Version Control This document contains confidential information for use only by the " Client " ; for the Project under consideration, which is provided for the sole purpose of permitting the recipient to evaluate the information submitted here with.In consideration of receipt of this document; unless agreed to in contrary in the Contract; the recipient agrees to maintain such information in confidence and to not reproduce or otherwise disclose this information to any person outside the recipient's organisation; except that there is no obligation to maintain the confidentiality of any information which was known to the recipient prior to receipt of such information from Tata Consulting Engineers Limited, or becomes publicly known through no fault of recipient, or Tata Consulting Engineers Limited, or is received without obligation of confidentiality from a third party owing no obligation of confidentiality to Tata Consulting Engineers Limited. All information given under this version over rides all and any kind of offers, assumptions, deliverables and contracts submitted verbally (and subsequently communicated in writing) or in writing or otherwise given under any and all previous version/s.

File Name: 12503A-CV-33220-Rev-P0

TITLE:- NETWORK DRAWING OF LIS POUR (BIR - BAGHERA CLUSTER) FOR SUJANPUR BLOCK, HAMIRPUR DISTRICT.

**TATA**CONSULTING ENGINEERS LIMITED.
MUMBAI

SCALE:- 1:8,000

DL.CEN.:- DEL-CV

DWG. No:- TCE.12503A-CV -3082-WS-33220

ISSUE:- P0

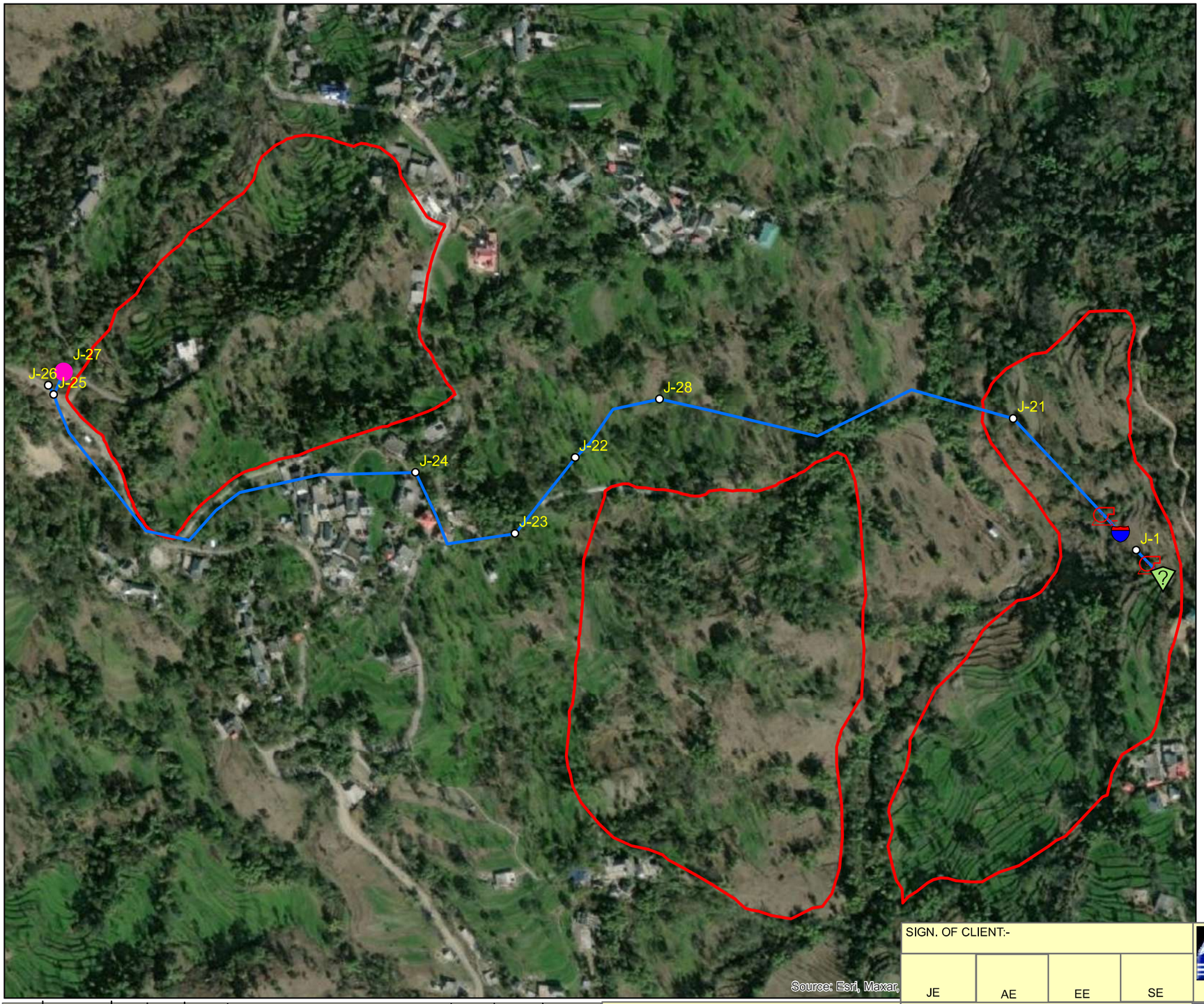

## Legend

- Source
- MDT_MT
- Pump
- Junction
- MT
- Rising Main GI Pipe
- Bhalana_Rei

| | | | | | | | | | |
|---|---|---|---|---|---|---|---|---|---|
| | SIGN. | | | | | | | | |
| | INITIALS | | | | | | | | |
| | REVISIONS | | | | | | | | |
| P0 | SIGN. | | | | | | | | |
| | INITIALS | GKJ | DG | DVB | | MK | DK | 24-06-2022 | |
| | REVISIONS | | | | | | | | |
| ISSUE | | DRN | DSN | CHD | CV EL IC ME CLEARED | PE/PM | APPD. | DATE | |

'P' (PRELIMINARY) ISSUES ARE NOT TO BE USED FOR CONSTRUCTION / FABRICATION BUT ARE ISSUED FOR LIMITED PURPOSES ONLY AS INDICATED IN THE SMALL BLOCK ABOVE THIS BLOCK.

CONSTRUCTION / FABRICATION WORK IS PERMITTED ON 'R' (RELEASED) ISSUES ONLY.

INFORMATION CONTAINED WITHIN 'HOLD' IS NOT RELEASED FOR CONSTUCTION / FABRICATION. FIELD MUST GET DESIGN OFFICE TO CLEAR 'HOLDS' IN TIME BEFORE PROCEEDING WITH ANY CONSTRUCTION/FABRICATION WORK RELATED TO 'HOLDS'.

SIGN. OF CLIENT:-

| JE | AE | EE | SE |
|---|---|---|---|

**PURPOSE: FOR TENDER ONLY**

Proprietary Notice and Version Control This document contains confidential information for use only by the " Client " ; for the Project under consideration, which is provided for the sole purpose of permitting the recipient to evaluate the information submitted here with.In consideration of receipt of this document; unless agreed to in contrary in the Contract; the recipient agrees to maintain such information in confidence and to not reproduce or otherwise disclose this information to any person outside the recipient's organisation; except that there is no obligation to maintain the confidentiality of any information which was known to the recipient prior to receipt of such information from Tata Consulting Engineers Limited, or becomes publicly known through no fault of recipient, or Tata Consulting Engineers Limited, or is received without obligation of confidentiality from a third party owing no obligation of confidentiality to Tata Consulting Engineers Limited. All information given under this version over rides all and any kind of offers, assumptions, deliverables and contracts submitted verbally (and subsequently communicated in writing) or in writing or otherwise given under any and all previous version/s.

File Name: 12503A-CV-33221-Rev-P0

**DETAILED DESIGN CONSULTANCY, HP-SHIVA (PACKAGE CS09)**

IRRIGATION, HORTICULTURE, ORCHARDS AND VALUE CHAIN DEVELOPMENT

TITLE:-

NETWORK DRAWING OF LIS PUNG KHAD
( BHALANA - REI CLUSTER ) FOR
SUJANPUR BLOCK, HAMIRPUR DISTRICT.

**TATA**CONSULTING ENGINEERS LIMITED.
MUMBAI

SCALE:- 1:4,000

DL.CEN.:- DEL-CV

DWG. No:- TCE.12503A-CV -3082-WS-33221

ISSUE:- P0

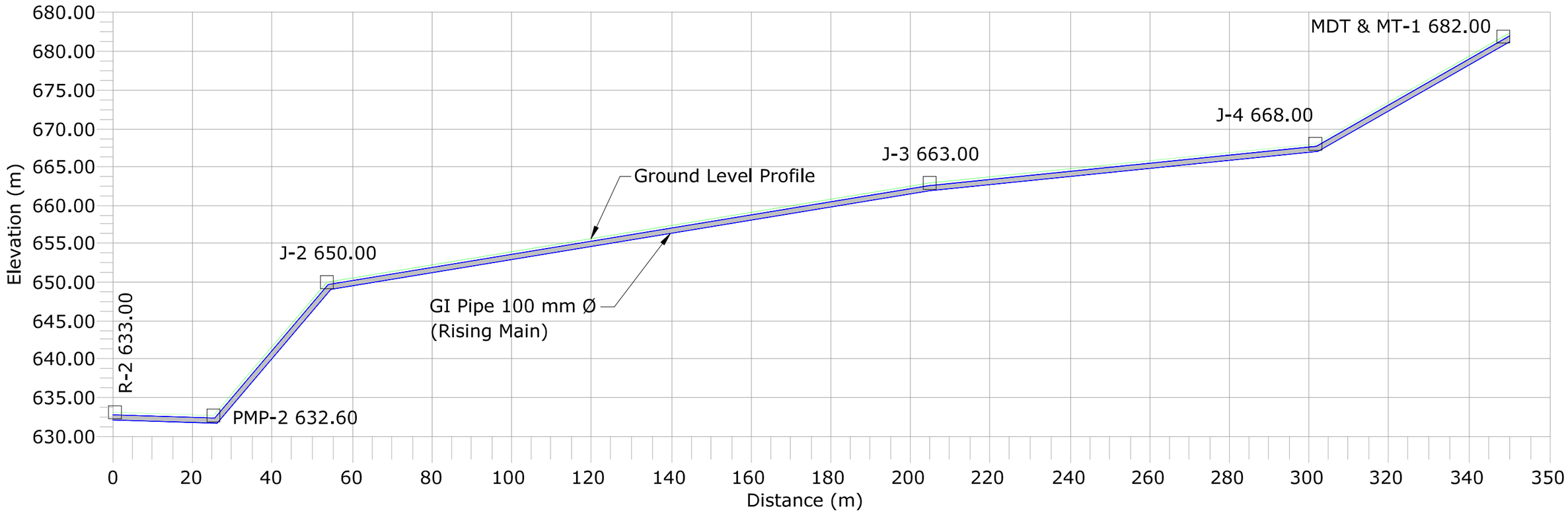


Legend :-
1. Ground Level
2. Rising Main
3. Junction
4. Air Valve
5. Scour Valve

Note:-
1 - Air Valves are Considered to be provided at 500 m c/c and at High Points.
2 - Scour Valves are Provided at 2000 m c/c Distance.
3 - Above is Tentative Arrangement. Based on Actual Site Condition size, Quantity and Location of Proposed Valves May Vary.

| | | | | | | | | | | | | | | |
|---|---|---|---|---|---|---|---|---|---|---|---|---|---|---|
| | SIGN. | | | | | | | | | | | | | |
| | INITIALS | | | | | | | | | | | | | |
| | REVISIONS | | | | | | | | | | | | | |
| P0 | SIGN. | | | | | | | | | | | | | 25-06-2022 |
| | INITIALS | BSN | DG | DVB | | | | | | | MK | DK | | |
| | REVISIONS | | | | | | | | | | | | | |
| ISSUE | | DRN | DSN | CHD | CV | EL | IC | ME | | | PE/PM | APPD | DATE (dd-mm-yyyy) | |
| | | | | | CLEARED | | | | | | | | | |

'P' (PRELIMINARY) ISSUES ARE NOT TO BE USED FOR CONSTRUCTION / FABRICATION BUT ARE ISSUED FOR LIMITED PURPOSES ONLY AS INDICATED IN THE SMALL BLOCK ABOVE THIS BLOCK.

CONSTRUCTION / FABRICATION WORK IS PERMITTED ON 'R' (RELEASED) ISSUES ONLY.

INFORMATION CONTAINED WITHIN 'HOLD' IS NOT RELEASED FOR CONSTUCTION / FABRICATION. FIELD MUST GET DESIGN OFFICE TO CLEAR 'HOLDS' IN TIME BEFORE PROCEEDING WITH ANY CONSTRUCTION/ FABRICATION WORK RELATED TO 'HOLDS'.

SIGN. OF CLIENT:-

| | | | |
|---|---|---|---|
| | | | |
| JE | AE | EE | SE |

PURPOSE : FOR TENDER ONLY

DO NOT SCALE

Proprietary Notice and Version Control This document contains confidential information for use only by the " Client " ; for the Project under consideration, which is provided for the sole purpose of permitting the recipient to evaluate the information submitted herewith. In consideration of receipt of this document; unless agreed to in contrary in the Contract; the recipient agrees to maintain such information in confidence and to not reproduce or otherwise disclose this information to any person outside the recipient's organisation; except that there is no obligation to maintain the confidentiality of any information which was known to the recipient prior to receipt of such information from Tata Consulting Engineers Limited, or becomes publicly known through no fault of recipient, or Tata Consulting Engineers Limited, or is received without obligation of confidentiality from a third party owing no obligation of confidentiality to Tata Consulting Engineers Limited. All information given under this version over rides all and any kind of offers, assumptions, deliverables and contracts submitted verbally (and subsequently communicated in writing) or in writing or otherwise given under any and all previous version/s.

FILE NAME 12503A-CV-33351-Rev-P0

DETAILED DESIGN CONSULTANCY, HP-SHIVA (PACKAGE-CS09)

IRRIGATION, HORTICULTURE, ORCHARDS AND VALUE CHAIN DEVELOPMENT

PROPOSED L-SECTION-LIS BAKARTI-1
HAMIRPUR BLOCK, HAMIRPUR DISTRICT

TATA CONSULTING ENGINEERS LIMITED
MUMBAI

| | | |
|---|---|---|
| SCALE : NTS | DWG NO. TCE.12503A-CV-3082-WS-33351 | ISSUE P0 |
| DC & DISC: DEL-CV | | |

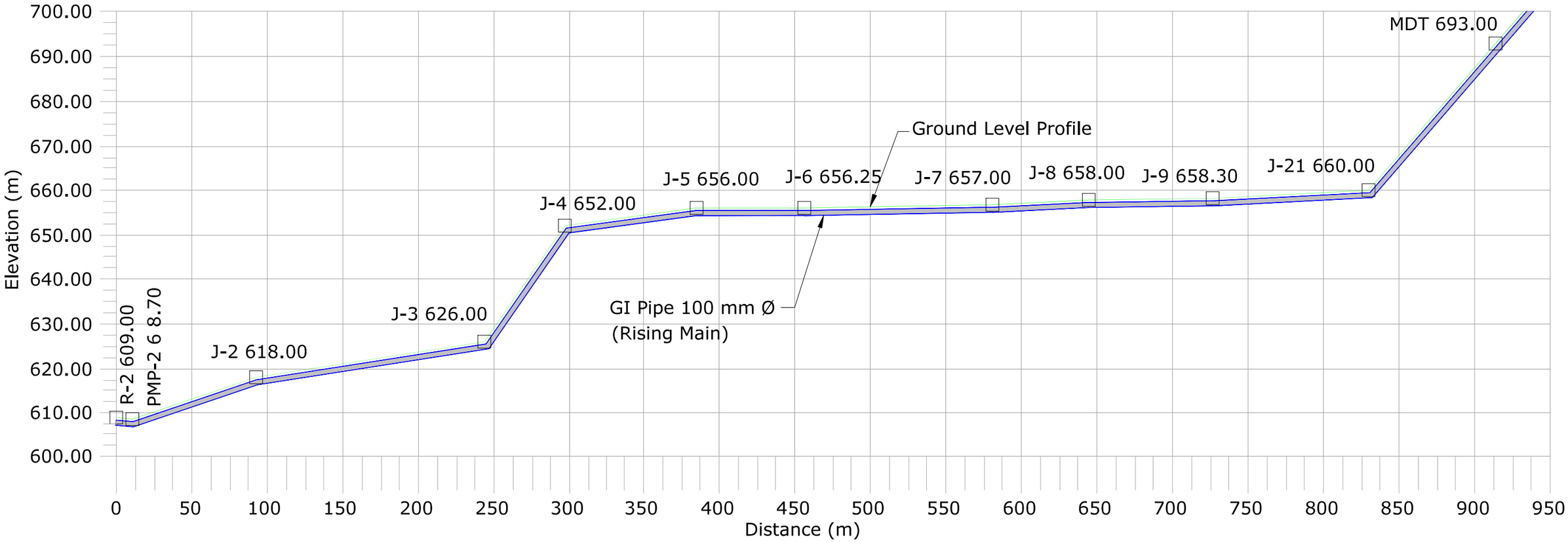


Legend :-
1. Ground Level
2. Rising Main
3. Junction
4. Air Valve
5. Scour Valve

Note:-
1 - Air Valves are Considered to be provided at 500 m c/c and at High Points.
2 - Scour Valves are Provided at 2000 m c/c Distance.
3 - Above is Tentative Arrangement. Based on Actual Site Condition size, Quantity and Location of Proposed Valves May Vary.

| | | | | | | | | | | | | | | |
|---|---|---|---|---|---|---|---|---|---|---|---|---|---|---|
| | SIGN. | | | | | | | | | | | | | |
| | INITIALS | | | | | | | | | | | | | |
| | REVISIONS | | | | | | | | | | | | | |
| | SIGN. | | | | | | | | | | | | | |
| P0 | INITIALS | BSN | DG | DVB | | | | | | | MK | DK | 25-06-2022 | |
| | REVISIONS | | | | | | | | | | | | | |
| ISSUE | | DRN | DSN | CHD | CV | EL | IC | ME | | | PE/PM | APPD | DATE (dd-mm-yyyy) | |
| | | | | | CLEARED | | | | | | | | | |

'P' (PRELIMINARY) ISSUES ARE NOT TO BE USED FOR CONSTRUCTION / FABRICATION BUT ARE ISSUED FOR LIMITED PURPOSES ONLY AS INDICATED IN THE SMALL BLOCK ABOVE THIS BLOCK.

CONSTRUCTION / FABRICATION WORK IS PERMITTED ON 'R' (RELEASED) ISSUES ONLY.

INFORMATION CONTAINED WITHIN 'HOLD' IS NOT RELEASED FOR CONSTUCTION / FABRICATION. FIELD MUST GET DESIGN OFFICE TO CLEAR 'HOLDS' IN TIME BEFORE PROCEEDING WITH ANY CONSTRUCTION/ FABRICATION WORK RELATED TO 'HOLDS'.

SIGN. OF CLIENT:-

| | | | |
|---|---|---|---|
| | | | |
| JE | AE | EE | SE |

PURPOSE : FOR TENDER ONLY

DO NOT SCALE

Proprietary Notice and Version Control This document contains confidential information for use only by the " Client " ; for the Project under consideration, which is provided for the sole purpose of permitting the recipient to evaluate the information submitted herewith. In consideration of receipt of this document; unless agreed to in contrary in the Contract; the recipient agrees to maintain such information in confidence and to not reproduce or otherwise disclose this information to any person outside the recipient's organisation; except that there is no obligation to maintain the confidentiality of any information which was known to the recipient prior to receipt of such information from Tata Consulting Engineers Limited, or becomes publicly known through no fault of recipient, or Tata Consulting Engineers Limited, or is received without obligation of confidentiality from a third party owing no obligation of confidentiality to Tata Consulting Engineers Limited. All information given under this version over rides all and any kind of offers, assumptions, deliverables and contracts submitted verbally (and subsequently communicated in writing) or in writing or otherwise given under any and all previous version/s.

FILE NAME 12503A-CV-33352-Rev-P0

DETAILED DESIGN CONSULTANCY, HP-SHIVA (PACKAGE-CS09)

IRRIGATION, HORTICULTURE, ORCHARDS AND VALUE CHAIN DEVELOPMENT

PROPOSED L-SECTION-LIS JAGAL ROPA
HAMIRPUR BLOCK, HAMIRPUR DISTRICT

TATA CONSULTING ENGINEERS LIMITED
MUMBAI

| | | |
|---|---|---|
| SCALE : NTS | DWG NO. TCE.12503A-CV-3082-WS-33352 | ISSUE P0 |
| DC & DISC: DEL-CV | | |

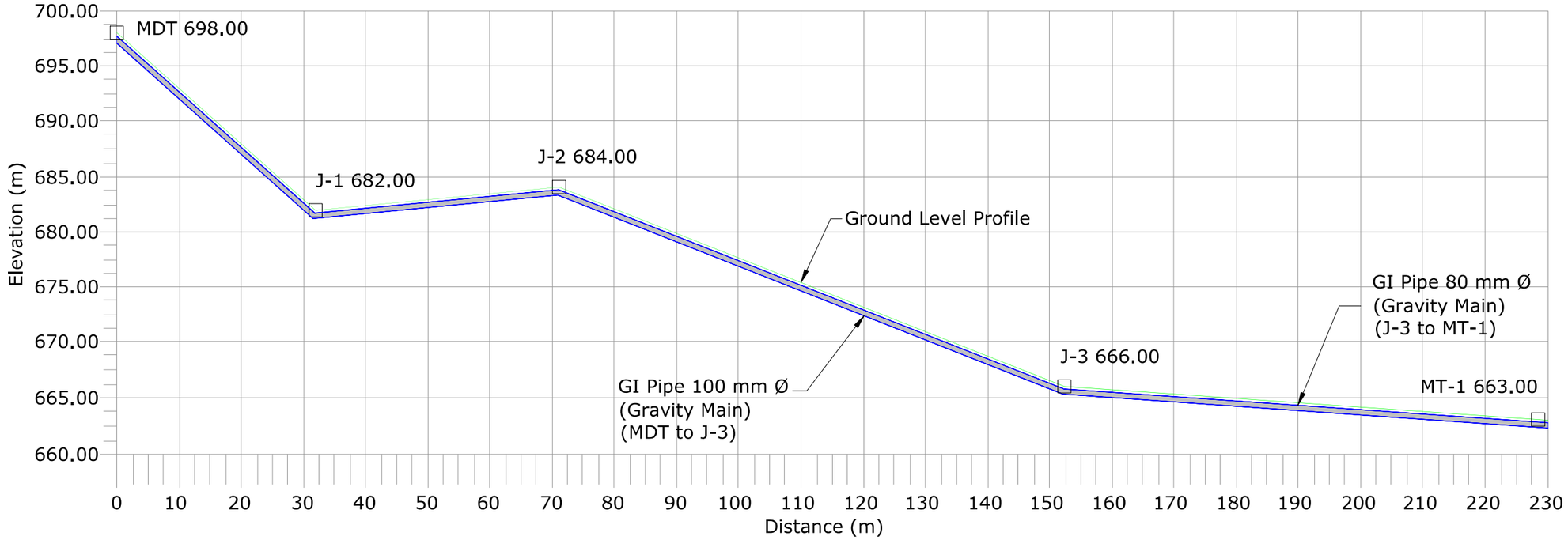


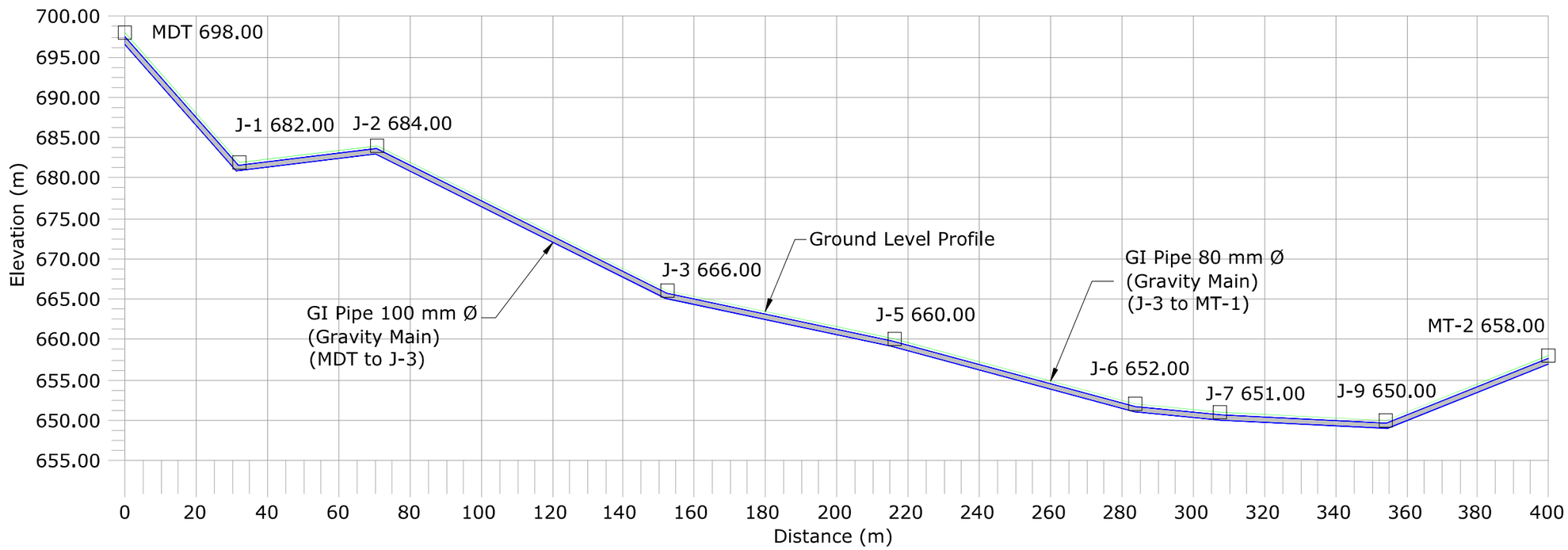


Legend :-
1. Ground Level
2. Rising Main
3. Junction
4. Air Valve
5. Scour Valve

Note:-
1 - Air Valves are Considered to be provided at 500 m c/c and at High Points.
2 - Scour Valves are Provided at 2000 m c/c Distance.
3 - Above is Tentative Arrangement. Based on Actual Site Condition size, Quantity and Location of Proposed Valves May Vary.

| | | | | | | | | | | | | | | |
|---|---|---|---|---|---|---|---|---|---|---|---|---|---|---|
| | SIGN. | | | | | | | | | | | | | |
| | INITIALS | | | | | | | | | | | | | |
| | REVISIONS | | | | | | | | | | | | | |
| P0 | SIGN. | | | | | | | | | | | | | 25-06-2022 |
| | INITIALS | BSN | DG | DVB | | | | | | | MK | DK | | |
| | REVISIONS | | | | | | | | | | | | | |
| ISSUE | | DRN | DSN | CHD | CV | EL | IC | ME | | | PE/PM | APPD | DATE (dd-mm-yyyy) | |
| | | | | | CLEARED | | | | | | | | | |

'P' (PRELIMINARY) ISSUES ARE NOT TO BE USED FOR CONSTRUCTION / FABRICATION BUT ARE ISSUED FOR LIMITED PURPOSES ONLY AS INDICATED IN THE SMALL BLOCK ABOVE THIS BLOCK.

CONSTRUCTION / FABRICATION WORK IS PERMITTED ON 'R' (RELEASED) ISSUES ONLY.

INFORMATION CONTAINED WITHIN 'HOLD' IS NOT RELEASED FOR CONSTUCTION / FABRICATION. FIELD MUST GET DESIGN OFFICE TO CLEAR 'HOLDS' IN TIME BEFORE PROCEEDING WITH ANY CONSTRUCTION/ FABRICATION WORK RELATED TO 'HOLDS'.

SIGN. OF CLIENT:-

| JE | AE | EE | SE |
|---|---|---|---|
| | | | |

PURPOSE : FOR TENDER ONLY

DO NOT SCALE

Proprietary Notice and Version Control This document contains confidential information for use only by the " Client " ; for the Project under consideration, which is provided for the sole purpose of permitting the recipient to evaluate the information submitted herewith. In consideration of receipt of this document; unless agreed to in contrary in the Contract; the recipient agrees to maintain such information in confidence and to not reproduce or otherwise disclose this information to any person outside the recipient's organisation; except that there is no obligation to maintain the confidentiality of any information which was known to the recipient prior to receipt of such information from Tata Consulting Engineers Limited, or becomes publicly known through no fault of recipient, or Tata Consulting Engineers Limited, or is received without obligation of confidentiality from a third party owing no obligation of confidentiality to Tata Consulting Engineers Limited. All information given under this version over rides all and any kind of offers, assumptions, deliverables and contracts submitted vertbally (and subsequently communicated in writing) or in writing or otherwise given under any and all previous version/s.

FILE NAME 12503A-CV-33353-Rev-P0

DETAILED DESIGN CONSULTANCY, HP-SHIVA (PACKAGE-CS09)

IRRIGATION, HORTICULTURE, ORCHARDS AND VALUE CHAIN DEVELOPMENT

PROPOSED L-SECTION-LIS JANGAL ROPA HAAR
HAMIRPUR BLOCK, HAMIRPUR DISTRICT

TATA CONSULTING ENGINEERS LIMITED
MUMBAI

| | | |
|---|---|---|
| SCALE : NTS | DWG NO. TCE.12503A-CV-3082-WS-33353 | ISSUE P0 |
| DC & DISC: DEL-CV | | |

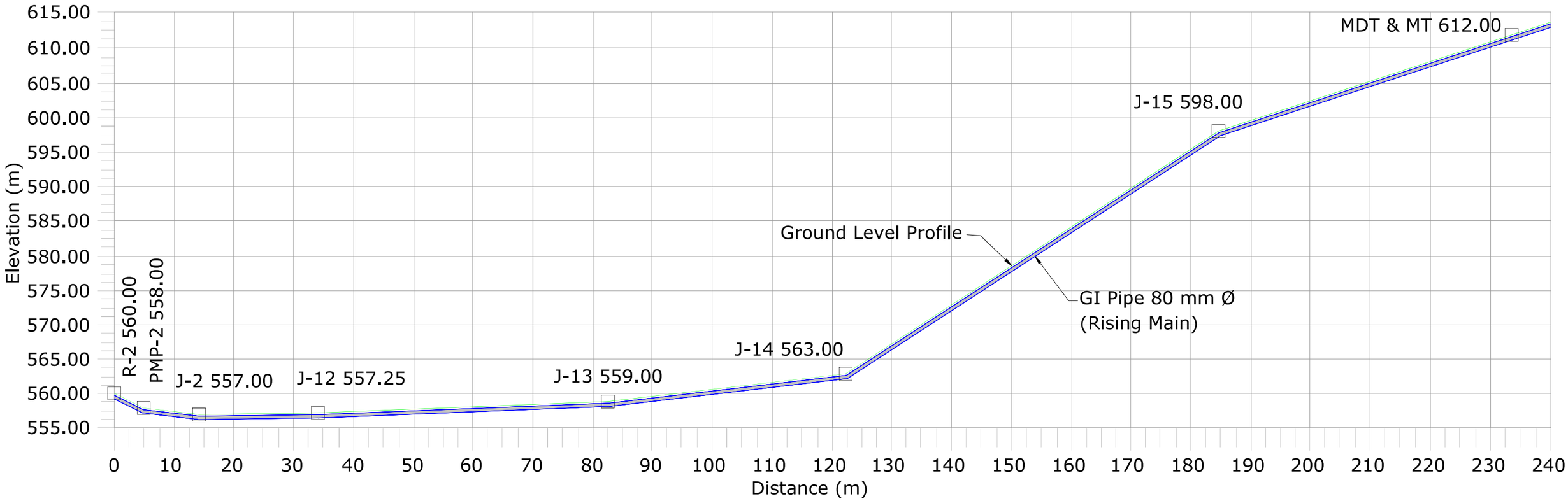


Legend :-
1. Ground Level
2. Rising Main
3. Junction
4. Air Valve
5. Scour Valve

Note:-
1 - Air Valves are Considered to be provided at 500 m c/c and at High Points.
2 - Scour Valves are Provided at 2000 m c/c Distance.
3 - Above is Tentative Arrangement. Based on Actual Site Condition size, Quantity and Location of Proposed Valves May Vary.

| | | | | | | | | | | | | | | |
|---|---|---|---|---|---|---|---|---|---|---|---|---|---|---|
| | SIGN. | | | | | | | | | | | | | |
| | INITIALS | | | | | | | | | | | | | |
| | REVISIONS | | | | | | | | | | | | | |
| P0 | SIGN. | | | | | | | | | | | | | 25-06-2022 |
| | INITIALS | BSN | DG | DVB | | | | | | | MK | DK | | |
| | REVISIONS | | | | | | | | | | | | | |
| ISSUE | | DRN | DSN | CHD | CV | EL | IC | ME | | | PE/PM | APPD | DATE (dd-mm-yyyy) | |
| | | | | | CLEARED | | | | | | | | | |

'P' (PRELIMINARY) ISSUES ARE NOT TO BE USED FOR CONSTRUCTION / FABRICATION BUT ARE ISSUED FOR LIMITED PURPOSES ONLY AS INDICATED IN THE SMALL BLOCK ABOVE THIS BLOCK.

CONSTRUCTION / FABRICATION WORK IS PERMITTED ON 'R' (RELEASED) ISSUES ONLY.

INFORMATION CONTAINED WITHIN 'HOLD' IS NOT RELEASED FOR CONSTUCTION / FABRICATION. FIELD MUST GET DESIGN OFFICE TO CLEAR 'HOLDS' IN TIME BEFORE PROCEEDING WITH ANY CONSTRUCTION/ FABRICATION WORK RELATED TO 'HOLDS'.

SIGN. OF CLIENT:-

| | | | |
|---|---|---|---|
| | | | |
| JE | AE | EE | SE |

PURPOSE : FOR TENDER ONLY

DO NOT SCALE

Proprietary Notice and Version Control This document contains confidential information for use only by the " Client " ; for the Project under consideration, which is provided for the sole purpose of permitting the recipient to evaluate the information submitted herewith. In consideration of receipt of this document; unless agreed to in contrary in the Contract; the recipient agrees to maintain such information in confidence and to not reproduce or otherwise disclose this information to any person outside the recipient's organisation; except that there is no obligation to maintain the confidentiality of any information which was known to the recipient prior to receipt of such information from Tata Consulting Engineers Limited, or becomes publicly known through no fault of recipient, or Tata Consulting Engineers Limited, or is received without obligation of confidentiality from a third party owing no obligation of confidentiality to Tata Consulting Engineers Limited. All information given under this version over rides all and any kind of offers, assumptions, deliverables and contracts submitted verbally (and subsequently communicated in writing) or in writing or otherwise given under any and all previous version/s.

FILE NAME 12503A-CV-33354-Rev-P0

DETAILED DESIGN CONSULTANCY, HP-SHIVA (PACKAGE-CS09)

IRRIGATION, HORTICULTURE, ORCHARDS AND VALUE CHAIN DEVELOPMENT

PROPOSED L-SECTION-LIS NERI

SUJANPUR BLOCK, HAMIRPUR DISTRICT

TATA CONSULTING ENGINEERS LIMITED

MUMBAI

| | | |
|---|---|---|
| SCALE : NTS | DWG NO. TCE.12503A-CV-3082-WS-33354 | ISSUE P0 |
| DC & DISC: DEL-CV | | |

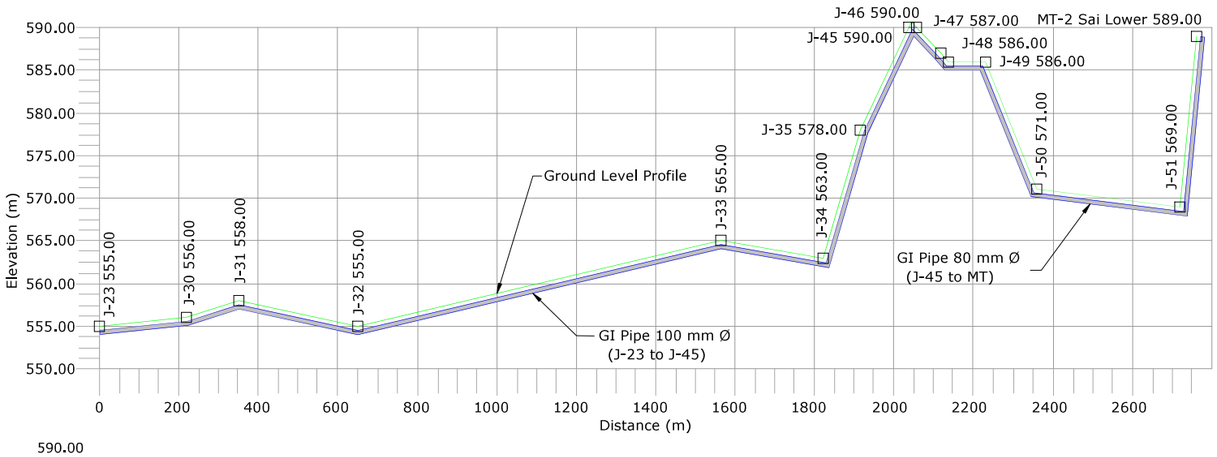


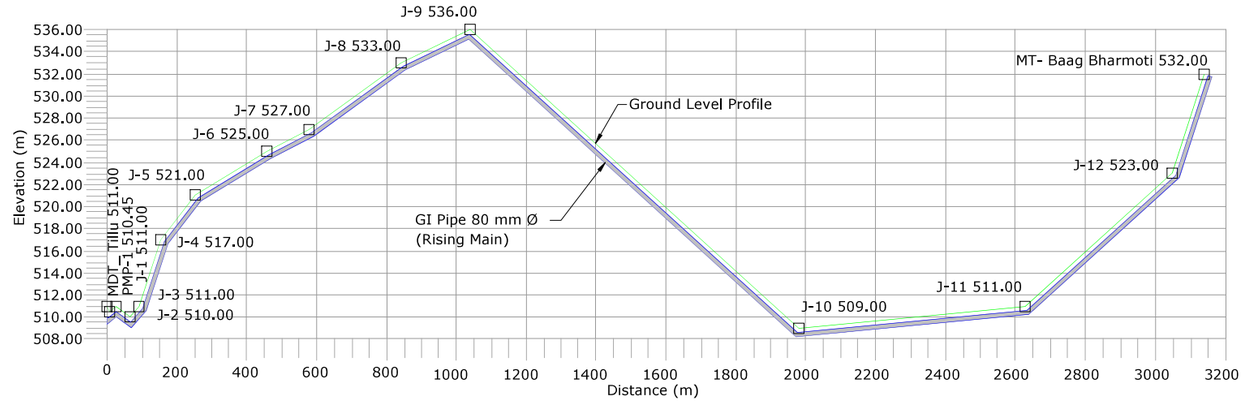


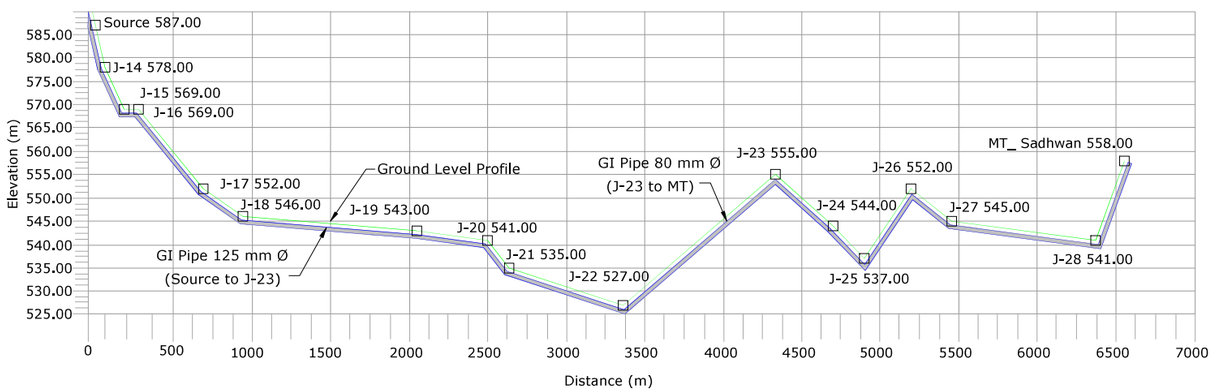


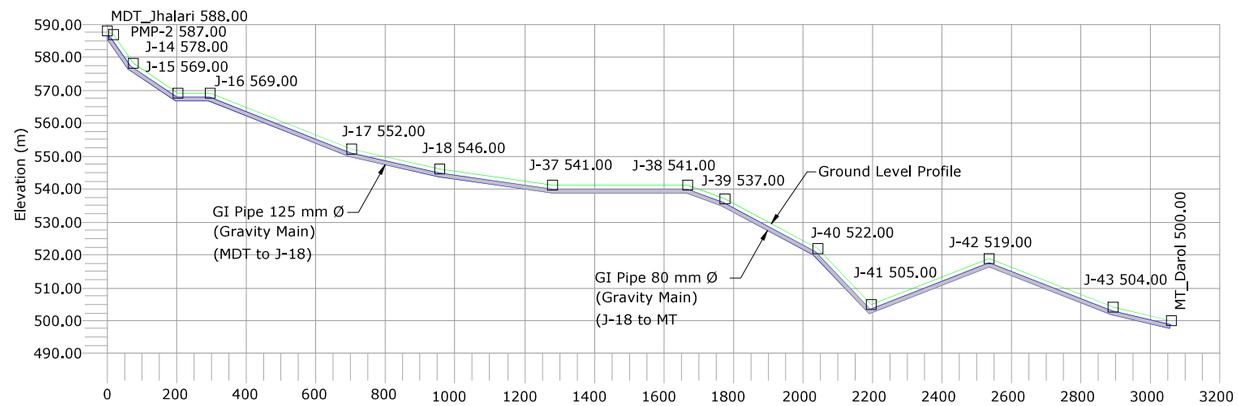


Legend :-

1. Ground Level
2. Rising Main
3. Junction
4. Air Valve
5. Scour Valve

Note:-

1 - Air Valves are Considered to be provided at 500 m c/c and at High Points.
2 - Scour Valves are Provided at 2000 m c/c Distance.
3 - Above is Tentative Arrangement. Based on Actual Site Condition size, Quantity and Location of Proposed Valves May Vary.

| | | | | | | | | | | | | | |
|---|---|---|---|---|---|---|---|---|---|---|---|---|---|
| | SIGN. | | | | | | | | | | | | |
| | INITIALS | | | | | | | | | | | | |
| | REVISIONS | | | | | | | | | | | | |
| P0 | SIGN. | | | | | | | | | | | | 25-06-2022 |
| | INITIALS | BSN | DG | DVB | | | | | | | MK | DK | |
| | REVISIONS | | | | | | | | | | | | |
| ISSUE | | DRN | DSN | CHD | CV | EL | IC | ME | | | PE/PM | APPD | DATE (dd-mm-yyyy) |
| | | | | | CLEARED | | | | | | | | |

'P' (PRELIMINARY) ISSUES ARE NOT TO BE USED FOR CONSTRUCTION / FABRICATION BUT ARE ISSUED FOR LIMITED PURPOSES ONLY AS INDICATED IN THE SMALL BLOCK ABOVE THIS BLOCK.

CONSTRUCTION / FABRICATION WORK IS PERMITTED ON 'R' (RELEASED) ISSUES ONLY.

INFORMATION CONTAINED WITHIN 'HOLD' IS NOT RELEASED FOR CONSTUCTION / FABRICATION. FIELD MUST GET DESIGN OFFICE TO CLEAR 'HOLDS' IN TIME BEFORE PROCEEDING WITH ANY CONSTRUCTION/ FABRICATION WORK RELATED TO 'HOLDS'.

SIGN. OF CLIENT:-

| JE | AE | EE | SE |
|---|---|---|---|
| | | | |

PURPOSE : FOR TENDER ONLY

DO NOT SCALE

Proprietary Notice and Version Control This document contains confidential information for use only by the " Client " ; for the Project under consideration, which is provided for the sole purpose of permitting the recipient to evaluate the information submitted herewith. In consideration of receipt of this document; unless agreed to in contrary in the Contract; the recipient agrees to maintain such information in confidence and to not reproduce or otherwise disclose this information to any person outside the recipient's organisation; except that there is no obligation to maintain the confidentiality of any information which was known to the recipient prior to receipt of such information from Tata Consulting Engineers Limited, or becomes publicly known through no fault of recipient, or Tata Consulting Engineers Limited, or is received without obligation of confidentiality from a third party owing no obligation of confidentiality to Tata Consulting Engineers Limited. All information given under this version over rides all and any kind of offers, assumptions, deliverables and contracts submitted verbally (and subsequently communicated in writing) or in writing or otherwise given under any and all previous version/s.

FILE NAME 12503A-CV-33355-Rev-P0

DETAILED DESIGN CONSULTANCY, HP-SHIVA (PACKAGE-CS09)

IRRIGATION, HORTICULTURE, ORCHARDS AND VALUE CHAIN DEVELOPMENT

PROPOSED L-SECTION-LIS MIP NADAUN LEFT BANK
NADAUN BLOCK, HAMIRPUR DISTRICT

TATA CONSULTING ENGINEERS LIMITED
MUMBAI

| SCALE : NTS | DWG NO. TCE.12503A-CV-3082-WS-33355 | ISSUE P0 |
|---|---|---|
| DC & DISC: DEL-CV | | |

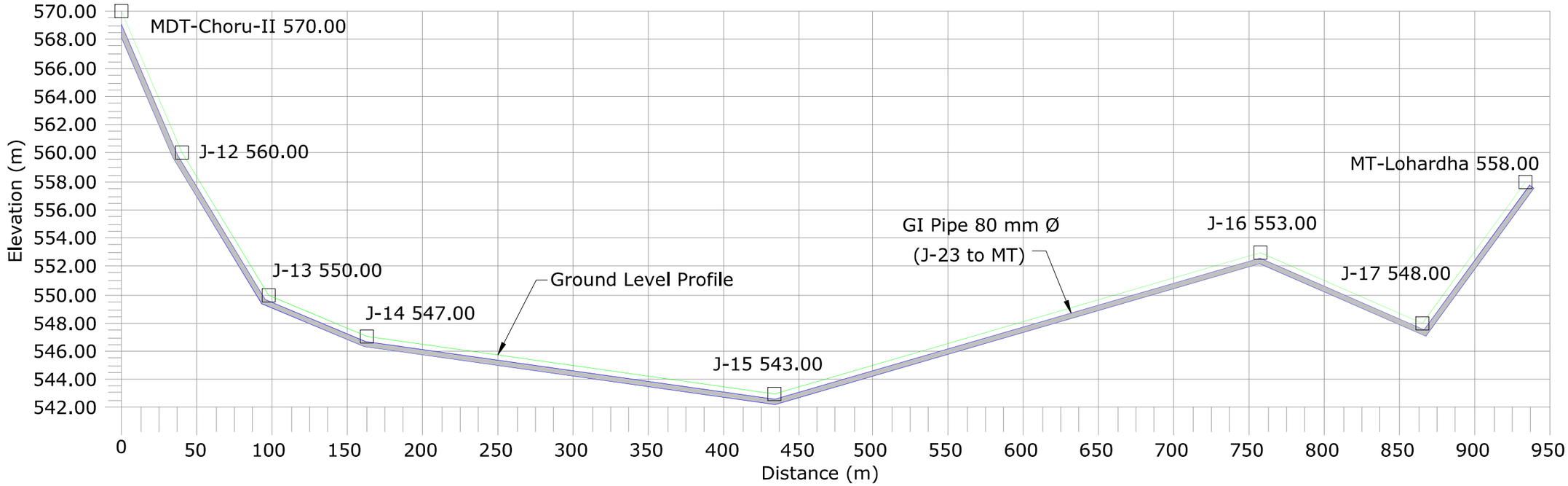


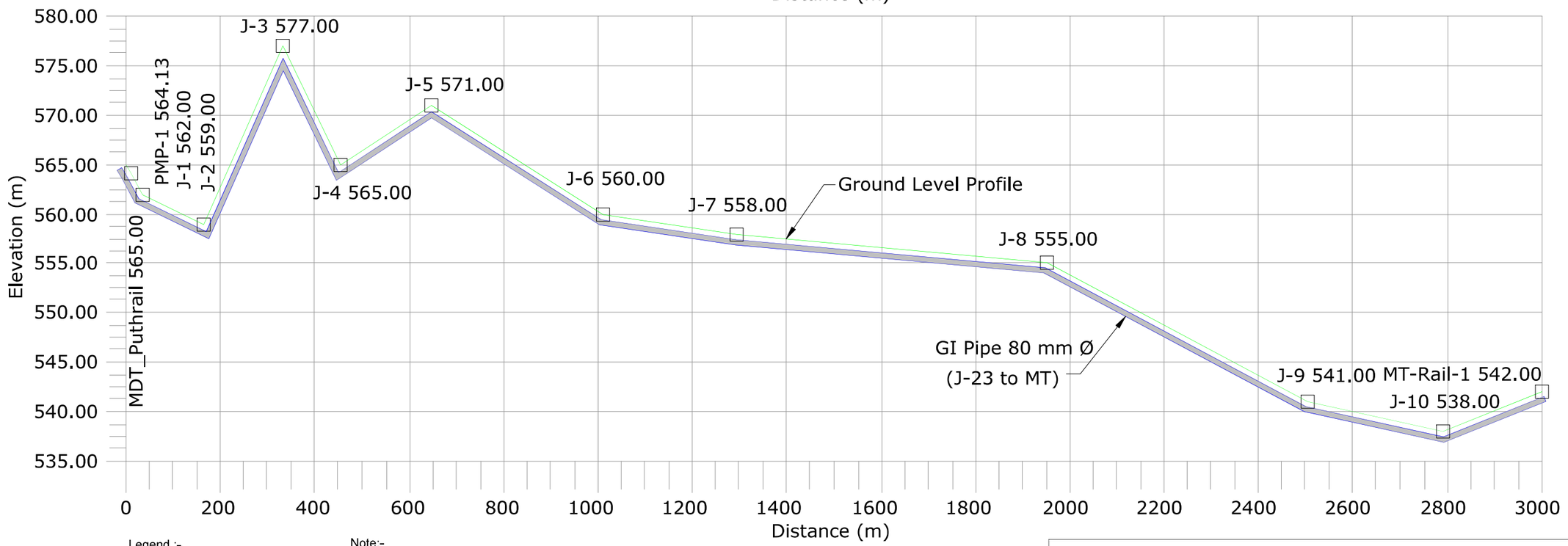


Legend :-
1. Ground Level
2. Rising Main
3. Junction
4. Air Valve
5. Scour Valve

Note:-
1 - Air Valves are Considered to be provided at 500 m c/c and at High Points.
2 - Scour Valves are Provided at 2000 m c/c Distance.
3 - Above is Tentative Arrangement. Based on Actual Site Condition size, Quantity and Location of Proposed Valves May Vary.

| | | | | | | | | | | | | | | |
|---|---|---|---|---|---|---|---|---|---|---|---|---|---|---|
| | SIGN. | | | | | | | | | | | | | |
| | INITIALS | | | | | | | | | | | | | |
| | REVISIONS | | | | | | | | | | | | | |
| P0 | SIGN. | | | | | | | | | | | | | 25-06-2022 |
| | INITIALS | BSN | DG | DVB | | | | | | | MK | DK | | |
| | REVISIONS | | | | | | | | | | | | | |
| ISSUE | | DRN | DSN | CHD | CV | EL | IC | ME | | | PE/PM | APPD | DATE (dd-mm-yyyy) | |
| | | | | | CLEARED | | | | | | | | | |

'P' (PRELIMINARY) ISSUES ARE NOT TO BE USED FOR CONSTRUCTION / FABRICATION BUT ARE ISSUED FOR LIMITED PURPOSES ONLY AS INDICATED IN THE SMALL BLOCK ABOVE THIS BLOCK.

CONSTRUCTION / FABRICATION WORK IS PERMITTED ON 'R' (RELEASED) ISSUES ONLY.

INFORMATION CONTAINED WITHIN 'HOLD' IS NOT RELEASED FOR CONSTUCTION / FABRICATION. FIELD MUST GET DESIGN OFFICE TO CLEAR 'HOLDS' IN TIME BEFORE PROCEEDING WITH ANY CONSTRUCTION/ FABRICATION WORK RELATED TO 'HOLDS'.

SIGN. OF CLIENT:–

| | | | |
|---|---|---|---|
| | | | |
| JE | AE | EE | SE |

PURPOSE : FOR TENDER ONLY

DO NOT SCALE

Proprietary Notice and Version Control This document contains confidential information for use only by the " Client " ; for the Project under consideration, which is provided for the sole purpose of permitting the recipient to evaluate the information submitted herewith. In consideration of receipt of this document; unless agreed to in contrary in the Contract; the recipient agrees to maintain such information in confidence and to not reproduce or otherwise disclose this information to any person outside the recipient's organisation; except that there is no obligation to maintain the confidentiality of any information which was known to the recipient prior to receipt of such information from Tata Consulting Engineers Limited, or becomes publicly known through no fault of recipient, or Tata Consulting Engineers Limited, or is received without obligation of confidentiality from a third party owing no obligation of confidentiality to Tata Consulting Engineers Limited. All information given under this version over rides all and any kind of offers, assumptions, deliverables and contracts submitted verbally (and subsequently communicated in writing) or in writing or otherwise given under any and all previous version/s.

FILE NAME 12503A–CV–33356–Rev–P0

DETAILED DESIGN CONSULTANCY, HP–SHIVA (PACKAGE–CS09)

IRRIGATION, HORTICULTURE, ORCHARDS AND VALUE CHAIN DEVELOPMENT

PROPOSED L–SECTION–LIS MIP RIGHT BANK
NADAUN BLOCK, HAMIRPUR DISTRICT

TATA CONSULTING ENGINEERS LIMITED
MUMBAI

| | | |
|---|---|---|
| SCALE : NTS | DWG NO. TCE.12503A–CV–3082–WS–33356 | ISSUE P0 |
| DC & DISC: DEL–CV | | |

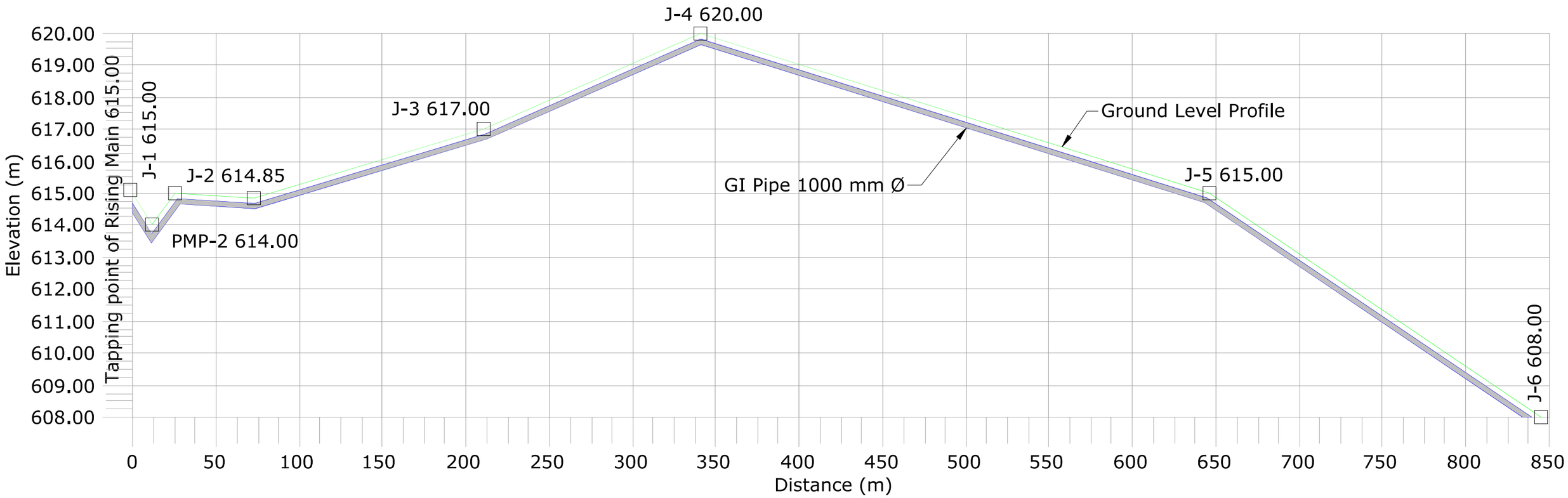


Legend :-
1. Ground Level
2. Rising Main
3. Junction
4. Air Valve
5. Scour Valve

Note:-
1 - Air Valves are Considered to be provided at 500 m c/c and at High Points.
2 - Scour Valves are Provided at 2000 m c/c Distance.
3 - Above is Tentative Arrangement. Based on Actual Site Condition size, Quantity and Location of Proposed Valves May Vary.

| | | | | | | | | | | | | | | |
|---|---|---|---|---|---|---|---|---|---|---|---|---|---|---|
| | SIGN. | | | | | | | | | | | | | |
| | INITIALS | | | | | | | | | | | | | |
| | REVISIONS | | | | | | | | | | | | | |
| P0 | SIGN. | | | | | | | | | | | | | 25-06-2022 |
| | INITIALS | BSN | DG | DVB | | | | | | | MK | DK | | |
| | REVISIONS | | | | | | | | | | | | | |
| ISSUE | | DRN | DSN | CHD | CV | EL | IC | ME | | | PE/PM | APPD | DATE (dd-mm-yyyy) | |
| | | | | | CLEARED | | | | | | | | | |

'P' (PRELIMINARY) ISSUES ARE NOT TO BE USED FOR CONSTRUCTION / FABRICATION BUT ARE ISSUED FOR LIMITED PURPOSES ONLY AS INDICATED IN THE SMALL BLOCK ABOVE THIS BLOCK.

CONSTRUCTION / FABRICATION WORK IS PERMITTED ON 'R' (RELEASED) ISSUES ONLY.

INFORMATION CONTAINED WITHIN 'HOLD' IS NOT RELEASED FOR CONSTUCTION / FABRICATION. FIELD MUST GET DESIGN OFFICE TO CLEAR 'HOLDS' IN TIME BEFORE PROCEEDING WITH ANY CONSTRUCTION/ FABRICATION WORK RELATED TO 'HOLDS'.

SIGN. OF CLIENT:-

| | | | |
|---|---|---|---|
| | | | |
| JE | AE | EE | SE |

PURPOSE : FOR TENDER ONLY

DO NOT SCALE

Proprietary Notice and Version Control This document contains confidential information for use only by the " Client " ; for the Project under consideration, which is provided for the sole purpose of permitting the recipient to evaluate the information submitted herewith. In consideration of receipt of this document; unless agreed to in contrary in the Contract; the recipient agrees to maintain such information in confidence and to not reproduce or otherwise disclose this information to any person outside the recipient's organisation; except that there is no obligation to maintain the confidentiality of any information which was known to the recipient prior to receipt of such information from Tata Consulting Engineers Limited, or becomes publicly known through no fault of recipient, or Tata Consulting Engineers Limited, or is received without obligation of confidentiality from a third party owing no obligation of confidentiality to Tata Consulting Engineers Limited. All information given under this version over rides all and any kind of offers, assumptions, deliverables and contracts submitted verbally (and subsequently communicated in writing) or in writing or otherwise given under any and all previous version/s.

FILE NAME 12503A-CV-33357-Rev-P0

DETAILED DESIGN CONSULTANCY, HP-SHIVA (PACKAGE-CS09)

IRRIGATION, HORTICULTURE, ORCHARDS AND VALUE CHAIN DEVELOPMENT

PROPOSED L-SECTION-LIS KUSHIAR GALOL
NADAUN BLOCK, HAMIRPUR DISTRICT

TATA CONSULTING ENGINEERS LIMITED
MUMBAI

| | | |
|---|---|---|
| SCALE : NTS | DWG NO. TCE.12503A-CV-3082-WS-33357 | ISSUE P0 |
| DC & DISC: DEL-CV | | |

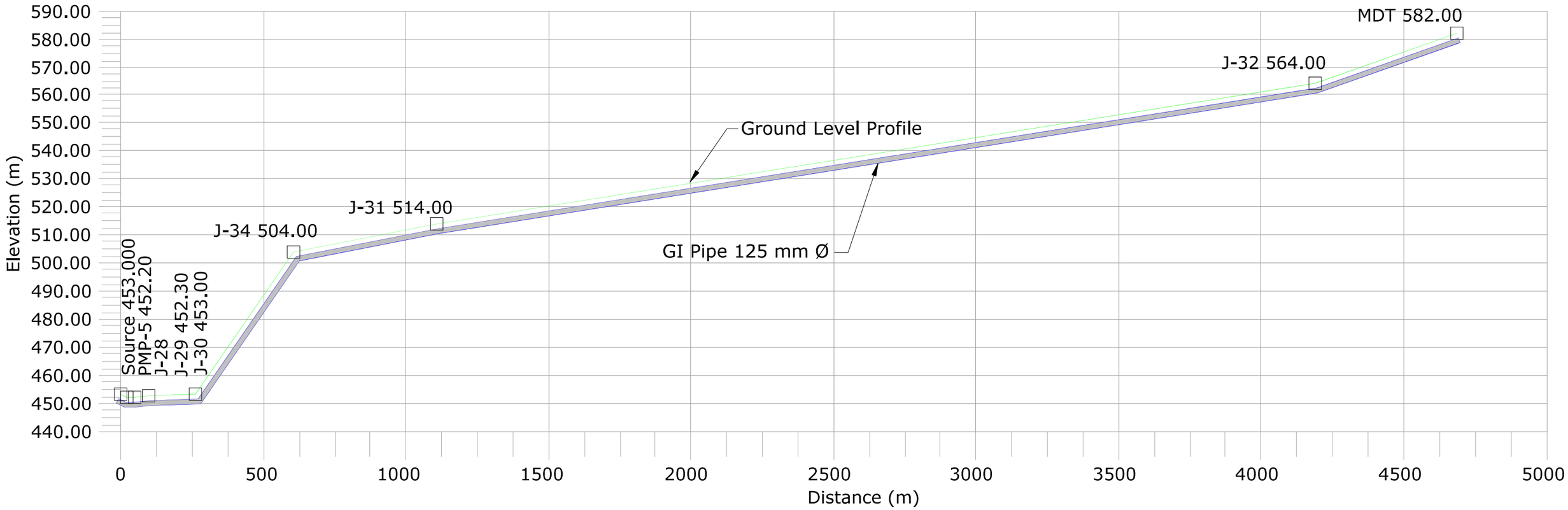


Legend :-
1. Ground Level
2. Rising Main
3. Junction
4. Air Valve
5. Scour Valve

Note:-
1 - Air Valves are Considered to be provided at 500 m c/c and at High Points.
2 - Scour Valves are Provided at 2000 m c/c Distance.
3 - Above is Tentative Arrangement. Based on Actual Site Condition size, Quantity and Location of Proposed Valves May Vary.

| | | | | | | | | | | | | | | |
|---|---|---|---|---|---|---|---|---|---|---|---|---|---|---|
| | SIGN. | | | | | | | | | | | | | |
| | INITIALS | | | | | | | | | | | | | |
| | REVISIONS | | | | | | | | | | | | | |
| | SIGN. | | | | | | | | | | | | | |
| P0 | INITIALS | BSN | DG | DVB | | | | | | | | MK | DK | 25-06-2022 |
| | REVISIONS | | | | | | | | | | | | | |
| ISSUE | | DRN | DSN | CHD | CV | EL | IC | ME | | | | PE/PM | APPD | DATE (dd-mm-yyyy) |
| | | | | | CLEARED | | | | | | | | | |

'P' (PRELIMINARY) ISSUES ARE NOT TO BE USED FOR CONSTRUCTION / FABRICATION BUT ARE ISSUED FOR LIMITED PURPOSES ONLY AS INDICATED IN THE SMALL BLOCK ABOVE THIS BLOCK.

CONSTRUCTION / FABRICATION WORK IS PERMITTED ON 'R' (RELEASED) ISSUES ONLY.

INFORMATION CONTAINED WITHIN 'HOLD' IS NOT RELEASED FOR CONSTUCTION / FABRICATION. FIELD MUST GET DESIGN OFFICE TO CLEAR 'HOLDS' IN TIME BEFORE PROCEEDING WITH ANY CONSTRUCTION/ FABRICATION WORK RELATED TO 'HOLDS'.

SIGN. OF CLIENT:–

| JE | AE | EE | SE |
|---|---|---|---|

PURPOSE : FOR TENDER ONLY

DO NOT SCALE

Proprietary Notice and Version Control This document contains confidential information for use only by the " Client " ; for the Project under consideration, which is provided for the sole purpose of permitting the recipient to evaluate the information submitted herewith. In consideration of receipt of this document; unless agreed to in contrary in the Contract; the recipient agrees to maintain such information in confidence and to not reproduce or otherwise disclose this information to any person outside the recipient's organisation; except that there is no obligation to maintain the confidentiality of any information which was known to the recipient prior to receipt of such information from Tata Consulting Engineers Limited, or becomes publicly known through no fault of recipient, or Tata Consulting Engineers Limited, or is received without obligation of confidentiality from a third party owing no obligation of confidentiality to Tata Consulting Engineers Limited. All information given under this version over rides all and any kind of offers, assumptions, deliverables and contracts submitted verbally (and subsequently communicated in writing) or in writing or otherwise given under any and all previous version/s.

DETAILED DESIGN CONSULTANCY, HP–SHIVA (PACKAGE–CS09)

IRRIGATION, HORTICULTURE, ORCHARDS AND VALUE CHAIN DEVELOPMENT

PROPOSED L–SECTION–LIS BHABRAN
NADAUN BLOCK, HAMIRPUR DISTRICT

TATA CONSULTING ENGINEERS LIMITED
MUMBAI

MDT 480.00
478.00
476.00

SCALE : NTS
DC & DISC : DEL–CV
DWG NO. TCE.12503A–CV–3082–WS–33358
ISSUE P0
FILE NAME 12503A–CV–33358–Rev–P0

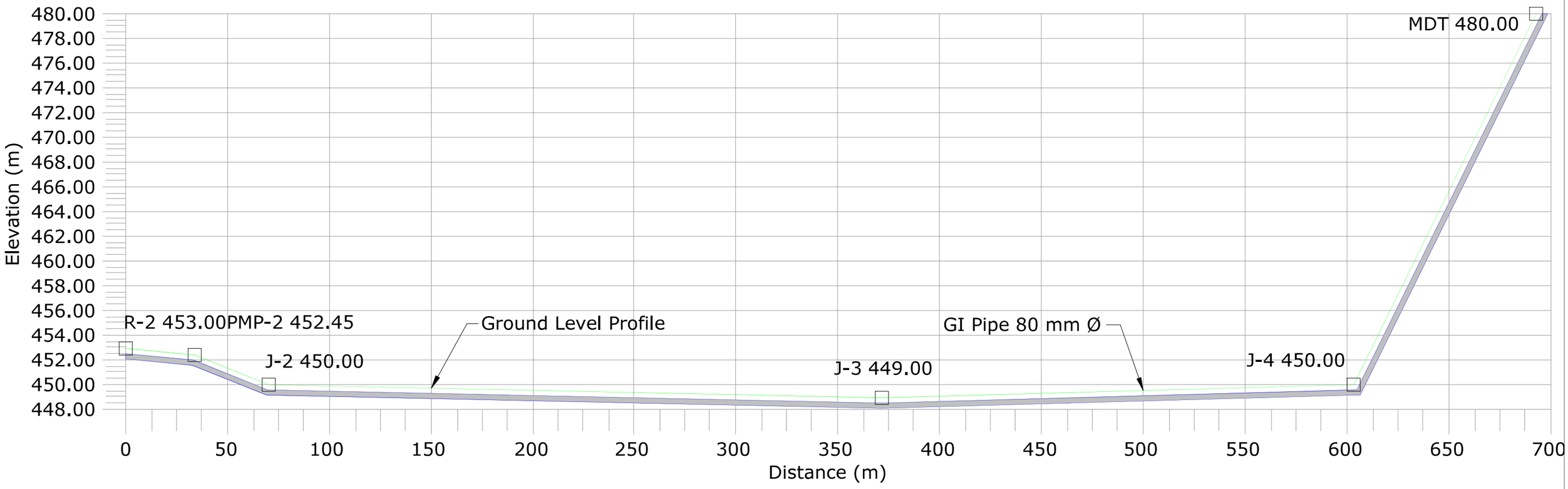


Legend :-
1. Ground Level
2. Rising Main
3. Junction
4. Air Valve
5. Scour Valve

Note:-
1 - Air Valves are Considered to be provided at 500 m c/c and at High Points.
2 - Scour Valves are Provided at 2000 m c/c Distance.
3 - Above is Tentative Arrangement. Based on Actual Site Condition size, Quantity and Location of Proposed Valves May Vary.

| | | | | | | | | | | | | | | |
|---|---|---|---|---|---|---|---|---|---|---|---|---|---|---|
| | SIGN. | | | | | | | | | | | | | |
| | INITIALS | | | | | | | | | | | | | |
| | REVISIONS | | | | | | | | | | | | | |
| P0 | SIGN. | | | | | | | | | | | | | 25-06-2022 |
| | INITIALS | BSN | DG | DVB | | | | | | | MK | DK | | |
| | REVISIONS | | | | | | | | | | | | | |
| ISSUE | | DRN | DSN | CHD | CV | EL | IC | ME | | | PE/PM | APPD | DATE (dd-mm-yyyy) | |
| | | | | | CLEARED | | | | | | | | | |

'P' (PRELIMINARY) ISSUES ARE NOT TO BE USED FOR CONSTRUCTION / FABRICATION BUT ARE ISSUED FOR LIMITED PURPOSES ONLY AS INDICATED IN THE SMALL BLOCK ABOVE THIS BLOCK.

CONSTRUCTION / FABRICATION WORK IS PERMITTED ON 'R' (RELEASED) ISSUES ONLY.

INFORMATION CONTAINED WITHIN 'HOLD' IS NOT RELEASED FOR CONSTUCTION / FABRICATION. FIELD MUST GET DESIGN OFFICE TO CLEAR 'HOLDS' IN TIME BEFORE PROCEEDING WITH ANY CONSTRUCTION/ FABRICATION WORK RELATED TO 'HOLDS'.

SIGN. OF CLIENT:–

| | | | |
|---|---|---|---|
| | | | |
| JE | AE | EE | SE |

PURPOSE : FOR TENDER ONLY

DO NOT SCALE

Proprietary Notice and Version Control This document contains confidential information for use only by the " Client " ; for the Project under consideration, which is provided for the sole purpose of permitting the recipient to evaluate the information submitted herewith. In consideration of receipt of this document; unless agreed to in contrary in the Contract; the recipient agrees to maintain such information in confidence and to not reproduce or otherwise disclose this information to any person outside the recipient's organisation; except that there is no obligation to maintain the confidentiality of any information which was known to the recipient prior to receipt of such information from Tata Consulting Engineers Limited, or becomes publicly known through no fault of recipient, or Tata Consulting Engineers Limited, or is received without obligation of confidentiality from a third party owing no obligation of confidentiality to Tata Consulting Engineers Limited. All information given under this version over rides all and any kind of offers, assumptions, deliverables and contracts submitted verbally (and subsequently communicated in writing) or in writing or otherwise given under any and all previous version/s.

FILE NAME 12503A–CV–33359–Rev–P0

DETAILED DESIGN CONSULTANCY, HP–SHIVA (PACKAGE–CS09)

IRRIGATION, HORTICULTURE, ORCHARDS AND VALUE CHAIN DEVELOPMENT

PROPOSED L–SECTION–LIS KALOOR
NADAUN BLOCK, HAMIRPUR DISTRICT

TATA CONSULTING ENGINEERS LIMITED
MUMBAI

SCALE : NTS
DC & DISC: DEL–CV

DWG NO. TCE.12503A–CV–3082–WS–33359

ISSUE P0

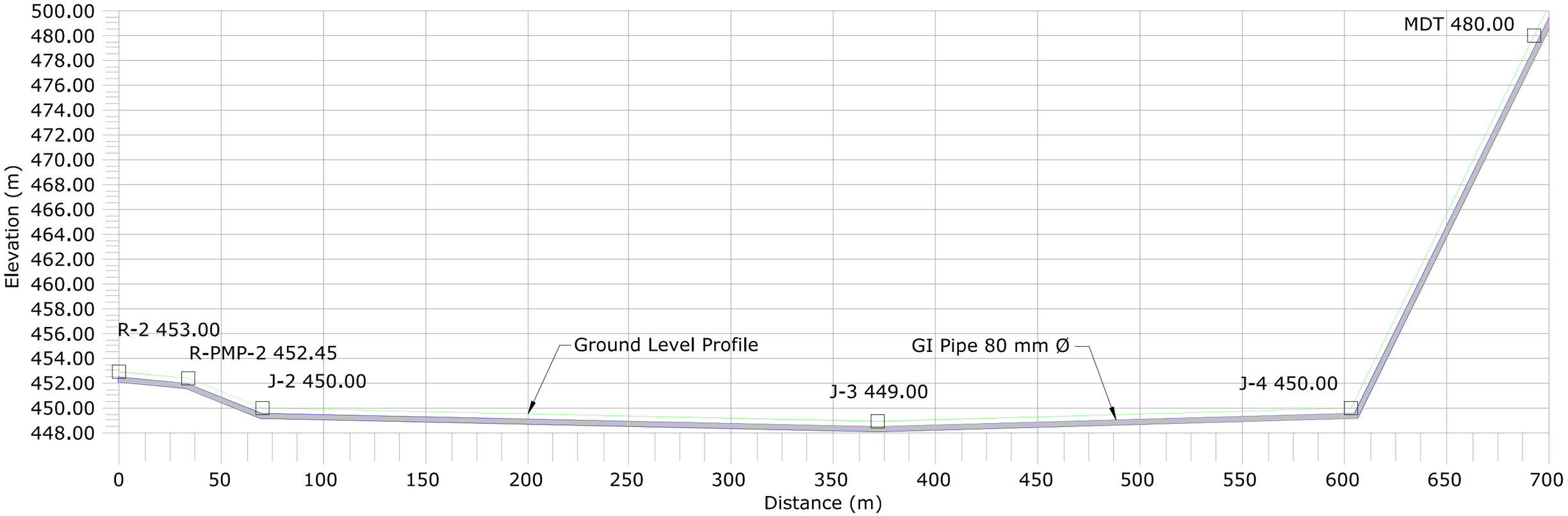


Legend :-
1. Ground Level
2. Rising Main
3. Junction
4. Air Valve
5. Scour Valve

Note:-
1 - Air Valves are Considered to be provided at 500 m c/c and at High Points.
2 - Scour Valves are Provided at 2000 m c/c Distance.
3 - Above is Tentative Arrangement. Based on Actual Site Condition size, Quantity and Location of Proposed Valves May Vary.

| | | | | | | | | | | | | | | |
|---|---|---|---|---|---|---|---|---|---|---|---|---|---|---|
| | SIGN. | | | | | | | | | | | | | |
| | INITIALS | | | | | | | | | | | | | |
| | REVISIONS | | | | | | | | | | | | | |
| P0 | SIGN. | | | | | | | | | | | | | 25-06-2022 |
| | INITIALS | BSN | DG | DVB | | | | | | | MK | DK | | |
| | REVISIONS | | | | | | | | | | | | | |
| ISSUE | | DRN | DSN | CHD | CV | EL | IC | ME | | | PE/PM | APPD | DATE (dd-mm-yyyy) | |
| | | | | | CLEARED | | | | | | | | | |

'P' (PRELIMINARY) ISSUES ARE NOT TO BE USED FOR CONSTRUCTION / FABRICATION BUT ARE ISSUED FOR LIMITED PURPOSES ONLY AS INDICATED IN THE SMALL BLOCK ABOVE THIS BLOCK.

CONSTRUCTION / FABRICATION WORK IS PERMITTED ON 'R' (RELEASED) ISSUES ONLY.

INFORMATION CONTAINED WITHIN 'HOLD' IS NOT RELEASED FOR CONSTUCTION / FABRICATION. FIELD MUST GET DESIGN OFFICE TO CLEAR 'HOLDS' IN TIME BEFORE PROCEEDING WITH ANY CONSTRUCTION/ FABRICATION WORK RELATED TO 'HOLDS'.

SIGN. OF CLIENT:-

| | | | |
|---|---|---|---|
| | | | |
| JE | AE | EE | SE |

PURPOSE : FOR TENDER ONLY

DO NOT SCALE

Proprietary Notice and Version Control This document contains confidential information for use only by the " Client " ; for the Project under consideration, which is provided for the sole purpose of permitting the recipient to evaluate the information submitted herewith. In consideration of receipt of this document; unless agreed to in contrary in the Contract; the recipient agrees to maintain such information in confidence and to not reproduce or otherwise disclose this information to any person outside the recipient's organisation; except that there is no obligation to maintain the confidentiality of any information which was known to the recipient prior to receipt of such information from Tata Consulting Engineers Limited, or becomes publicly known through no fault of recipient, or Tata Consulting Engineers Limited, or is received without obligation of confidentiality from a third party owing no obligation of confidentiality to Tata Consulting Engineers Limited. All information given under this version over rides all and any kind of offers, assumptions, deliverables and contracts submitted verbally (and subsequently communicated in writing) or in writing or otherwise given under any and all previous version/s.

FILE NAME 12503A-CV-33360-Rev-P0

DETAILED DESIGN CONSULTANCY, HP-SHIVA (PACKAGE-CS09)

IRRIGATION, HORTICULTURE, ORCHARDS AND VALUE CHAIN DEVELOPMENT

PROPOSED L-SECTION-LIS KASHMIR
NADAUN BLOCK, HAMIRPUR DISTRICT

TATA CONSULTING ENGINEERS LIMITED
MUMBAI

| | | | |
|---|---|---|---|
| SCALE : NTS | DWG NO. TCE.12503A-CV-3082-WS-33360 | | ISSUE P0 |
| DC & DISC: DEL-CV | | | |

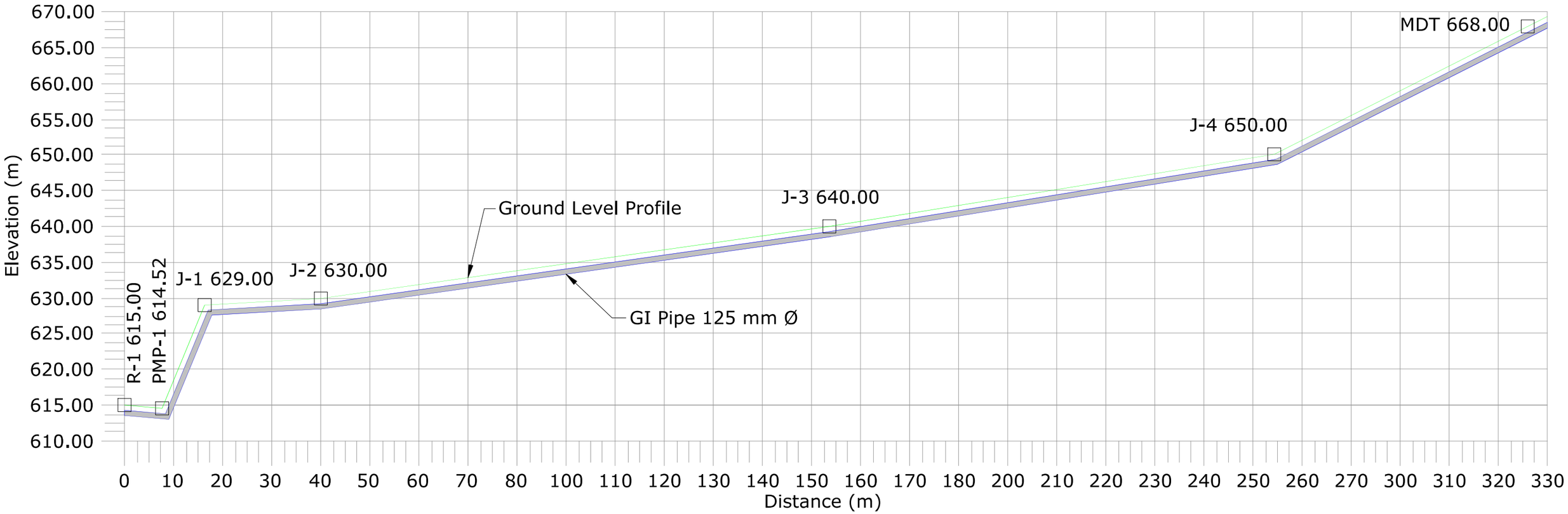


| | | | | | | | | | | | | | | |
|---|---|---|---|---|---|---|---|---|---|---|---|---|---|---|
| | SIGN. | | | | | | | | | | | | | |
| | INITIALS | | | | | | | | | | | | | |
| | REVISIONS | | | | | | | | | | | | | |
| P0 | SIGN. | | | | | | | | | | | | | 25-06-2022 |
| | INITIALS | BSN | DG | DVB | | | | | | | MK | DK | | |
| | REVISIONS | | | | | | | | | | | | | |
| ISSUE | | DRN | DSN | CHD | CV | EL | IC | ME | | | PE/PM | APPD | DATE (dd-mm-yyyy) | |
| | | | | | CLEARED | | | | | | | | | |

'P' (PRELIMINARY) ISSUES ARE NOT TO BE USED FOR CONSTRUCTION / FABRICATION BUT ARE ISSUED FOR LIMITED PURPOSES ONLY AS INDICATED IN THE SMALL BLOCK ABOVE THIS BLOCK.

CONSTRUCTION / FABRICATION WORK IS PERMITTED ON 'R' (RELEASED) ISSUES ONLY.

INFORMATION CONTAINED WITHIN 'HOLD' IS NOT RELEASED FOR CONSTUCTION / FABRICATION. FIELD MUST GET DESIGN OFFICE TO CLEAR 'HOLDS' IN TIME BEFORE PROCEEDING WITH ANY CONSTRUCTION/ FABRICATION WORK RELATED TO 'HOLDS'.

SIGN. OF CLIENT:-

| | | | |
|---|---|---|---|
| | | | |
| JE | AE | EE | SE |

PURPOSE : FOR TENDER ONLY

DO NOT SCALE

Proprietary Notice and Version Control This document contains confidential information for use only by the " Client " ; for the Project under consideration, which is provided for the sole purpose of permitting the recipient to evaluate the information submitted herewith. In consideration of receipt of this document; unless agreed to in contrary in the Contract; the recipient agrees to maintain such information in confidence and to not reproduce or otherwise disclose this information to any person outside the recipient's organisation; except that there is no obligation to maintain the confidentiality of any information which was known to the recipient prior to receipt of such information from Tata Consulting Engineers Limited, or becomes publicly known through no fault of recipient, or Tata Consulting Engineers Limited, or is received without obligation of confidentiality from a third party owing no obligation of confidentiality to Tata Consulting Engineers Limited. All information given under this version over rides all and any kind of offers, assumptions, deliverables and contracts submitted verbally (and subsequently communicated in writing) or in writing or otherwise given under any and all previous version/s.

FILE NAME 12503A-CV-33361-Rev-P0

DETAILED DESIGN CONSULTANCY, HP-SHIVA (PACKAGE-CS09)

IRRIGATION, HORTICULTURE, ORCHARDS AND VALUE CHAIN DEVELOPMENT

PROPOSED L-SECTION-LIS PALSI

NADAUN BLOCK, HAMIRPUR DISTRICT

TATA CONSULTING ENGINEERS LIMITED

MUMBAI

| | | |
|---|---|---|
| SCALE : NTS | DWG NO. TCE.12503A-CV-3082-WS-33361 | ISSUE P0 |
| DC & DISC: DEL-CV | | |

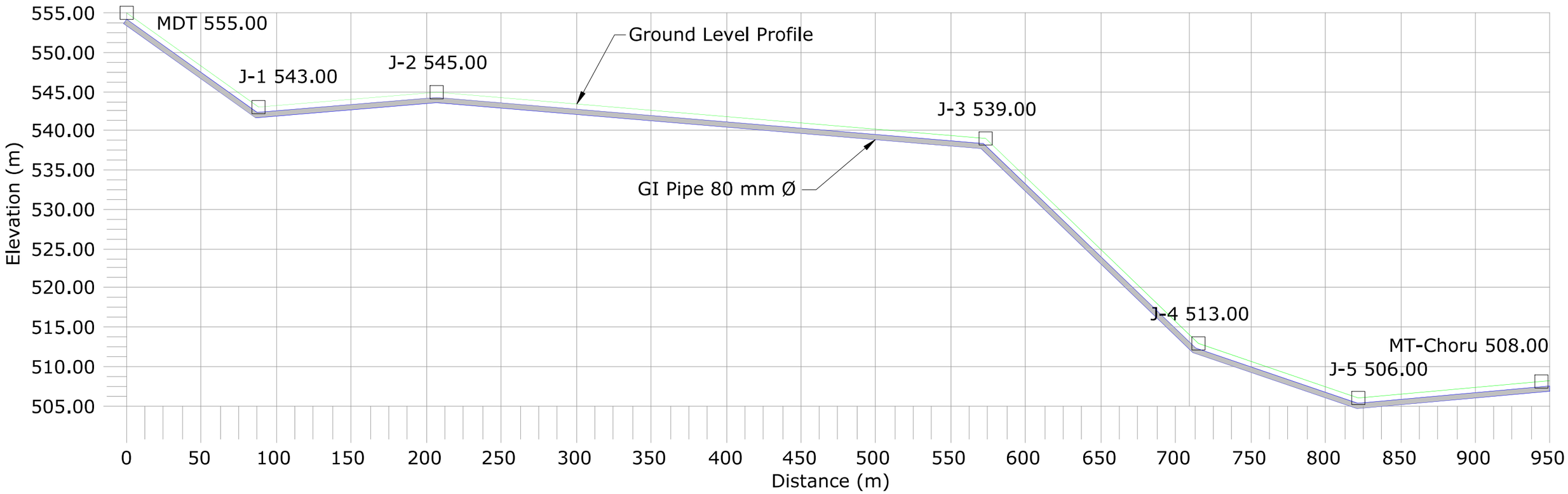


Legend :-
1. Ground Level
2. Rising Main
3. Junction
4. Air Valve
5. Scour Valve

Note:-
1 - Air Valves are Considered to be provided at 500 m c/c and at High Points.
2 - Scour Valves are Provided at 2000 m c/c Distance.
3 - Above is Tentative Arrangement. Based on Actual Site Condition size, Quantity and Location of Proposed Valves May Vary.

| | | | | | | | | | | | | | | |
|---|---|---|---|---|---|---|---|---|---|---|---|---|---|---|
| | SIGN. | | | | | | | | | | | | | |
| | INITIALS | | | | | | | | | | | | | |
| | REVISIONS | | | | | | | | | | | | | |
| P0 | SIGN. | | | | | | | | | | | | | 25-06-2022 |
| | INITIALS | BSN | DG | DVB | | | | | | | MK | DK | | |
| | REVISIONS | | | | | | | | | | | | | |
| ISSUE | | DRN | DSN | CHD | CV | EL | IC | ME | | | PE/PM | APPD | DATE (dd-mm-yyyy) | |
| | | | | | CLEARED | | | | | | | | | |

'P' (PRELIMINARY) ISSUES ARE NOT TO BE USED FOR CONSTRUCTION / FABRICATION BUT ARE ISSUED FOR LIMITED PURPOSES ONLY AS INDICATED IN THE SMALL BLOCK ABOVE THIS BLOCK.

CONSTRUCTION / FABRICATION WORK IS PERMITTED ON 'R' (RELEASED) ISSUES ONLY.

INFORMATION CONTAINED WITHIN 'HOLD' IS NOT RELEASED FOR CONSTUCTION / FABRICATION. FIELD MUST GET DESIGN OFFICE TO CLEAR 'HOLDS' IN TIME BEFORE PROCEEDING WITH ANY CONSTRUCTION/ FABRICATION WORK RELATED TO 'HOLDS'.

SIGN. OF CLIENT:-

| | | | |
|---|---|---|---|
| | | | |
| JE | AE | EE | SE |

PURPOSE : FOR TENDER ONLY

DO NOT SCALE

Proprietary Notice and Version Control This document contains confidential information for use only by the " Client " ; for the Project under consideration, which is provided for the sole purpose of permitting the recipient to evaluate the information submitted herewith. In consideration of receipt of this document; unless agreed to in contrary in the Contract; the recipient agrees to maintain such information in confidence and to not reproduce or otherwise disclose this information to any person outside the recipient's organisation; except that there is no obligation to maintain the confidentiality of any information which was known to the recipient prior to receipt of such information from Tata Consulting Engineers Limited, or becomes publicly known through no fault of recipient, or Tata Consulting Engineers Limited, or is received without obligation of confidentiality from a third party owing no obligation of confidentiality to Tata Consulting Engineers Limited. All information given under this version over rides all and any kind of offers, assumptions, deliverables and contracts submitted verbally (and subsequently communicated in writing) or in writing or otherwise given under any and all previous version/s.

FILE NAME 12503A-CV-33362-Rev-P0

DETAILED DESIGN CONSULTANCY, HP-SHIVA (PACKAGE-CS09)

IRRIGATION, HORTICULTURE, ORCHARDS AND VALUE CHAIN DEVELOPMENT

PROPOSED L-SECTION-LIS BHOO

NADAUN BLOCK, HAMIRPUR DISTRICT

TATA CONSULTING ENGINEERS LIMITED

MUMBAI

| | | |
|---|---|---|
| SCALE : NTS | DWG NO. TCE.12503A-CV-3082-WS-33362 | ISSUE P0 |
| DC & DISC: DEL-CV | | |

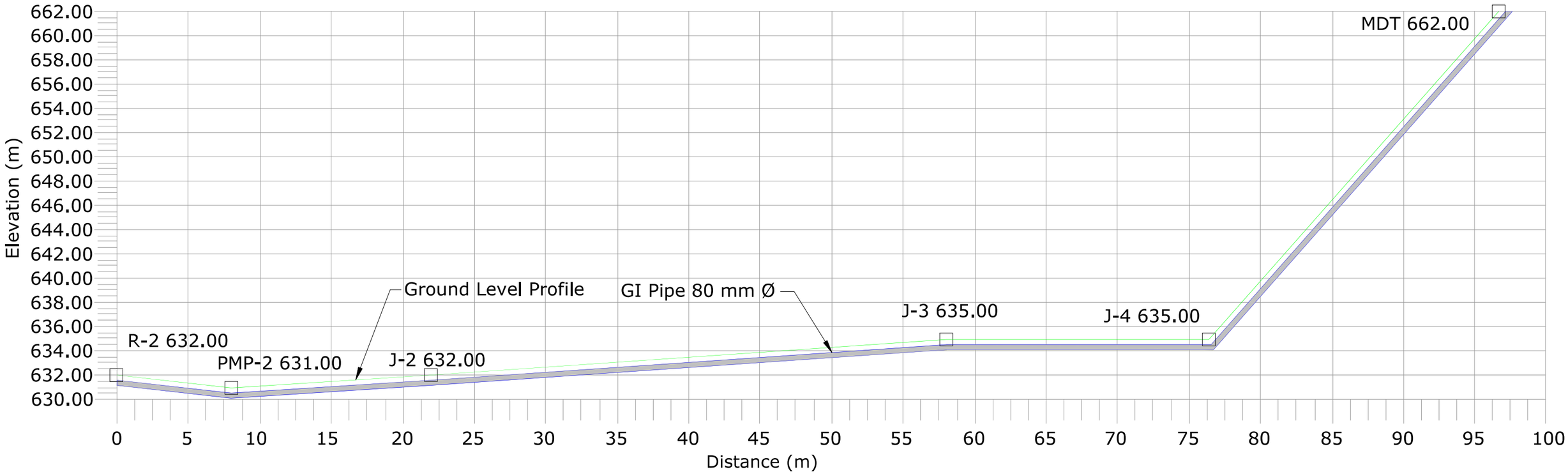


Legend :-
1. Ground Level
2. Rising Main
3. Junction
4. Air Valve
5. Scour Valve

Note:-
1 - Air Valves are Considered to be provided at 500 m c/c and at High Points.
2 - Scour Valves are Provided at 2000 m c/c Distance.
3 - Above is Tentative Arrangement. Based on Actual Site Condition size, Quantity and Location of Proposed Valves May Vary.

| | | | | | | | | | | | | | | |
|---|---|---|---|---|---|---|---|---|---|---|---|---|---|---|
| | SIGN. | | | | | | | | | | | | | |
| | INITIALS | | | | | | | | | | | | | |
| | REVISIONS | | | | | | | | | | | | | |
| P0 | SIGN. | | | | | | | | | | | | | 25-06-2022 |
| | INITIALS | BSN | DG | DVB | | | | | | | MK | DK | | |
| | REVISIONS | | | | | | | | | | | | | |
| ISSUE | | DRN | DSN | CHD | CV | EL | IC | ME | | | PE/PM | APPD | DATE (dd-mm-yyyy) | |
| | | | | | CLEARED | | | | | | | | | |

'P' (PRELIMINARY) ISSUES ARE NOT TO BE USED FOR CONSTRUCTION / FABRICATION BUT ARE ISSUED FOR LIMITED PURPOSES ONLY AS INDICATED IN THE SMALL BLOCK ABOVE THIS BLOCK.

CONSTRUCTION / FABRICATION WORK IS PERMITTED ON 'R' (RELEASED) ISSUES ONLY.

INFORMATION CONTAINED WITHIN 'HOLD' IS NOT RELEASED FOR CONSTUCTION / FABRICATION. FIELD MUST GET DESIGN OFFICE TO CLEAR 'HOLDS' IN TIME BEFORE PROCEEDING WITH ANY CONSTRUCTION/ FABRICATION WORK RELATED TO 'HOLDS'.

SIGN. OF CLIENT:–

| | | | |
|---|---|---|---|
| | | | |
| JE | AE | EE | SE |

PURPOSE : FOR TENDER ONLY

DO NOT SCALE

Proprietary Notice and Version Control This document contains confidential information for use only by the " Client " ; for the Project under consideration, which is provided for the sole purpose of permitting the recipient. to evaluate the information submitted herewith. In consideration of receipt of this document; unless agreed to in contrary in the Contract; the recipient agrees to maintain such information in confidence and to not reproduce or otherwise disclose this information to any person outside the recipient's organisation; except that there is no obligation to maintain the confidentiality of any information which was known to the recipient prior to receipt of such information from Tata Consulting Engineers Limited, or becomes publicly known through no fault of recipient, or Tata Consulting Engineers Limited, or is received without obligation of confidentiality from a third party owing no obligation of confidentiality to Tata Consulting Engineers Limited. All information given under this version over rides all and any kind of offers, assumptions, deliverables and contracts submitted verbally (and subsequently communicated in writing) or in writing or otherwise given under any and all previous version/s.

FILE NAME 12503A–CV–33363–Rev–P0

DETAILED DESIGN CONSULTANCY, HP–SHIVA (PACKAGE–CS09)

IRRIGATION, HORTICULTURE, ORCHARDS AND VALUE CHAIN DEVELOPMENT

PROPOSED L–SECTION–LIS SALASI NALLAH
NADAUN BLOCK, HAMIRPUR DISTRICT

TATA CONSULTING ENGINEERS LIMITED
MUMBAI

| | | |
|---|---|---|
| SCALE : NTS | DWG NO. TCE.12503A–CV–3082–WS–33363 | ISSUE P0 |
| DC & DISC: DEL–CV | | |

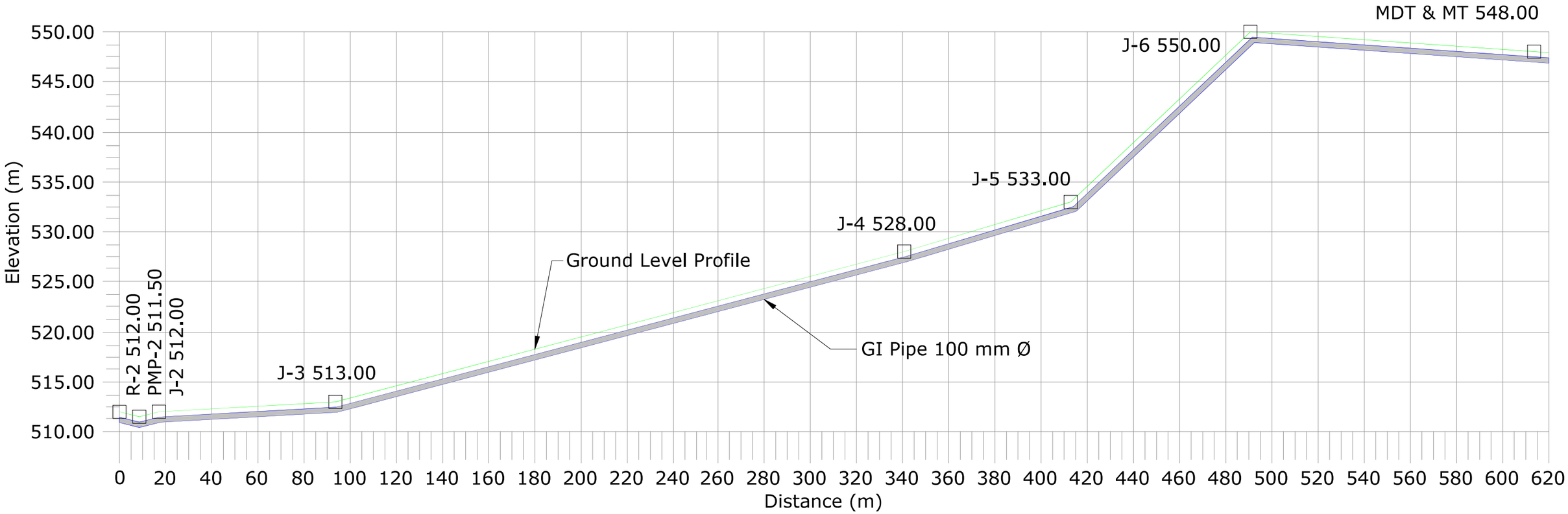


Legend :-
1. Ground Level
2. Rising Main
3. Junction
4. Air Valve
5. Scour Valve

Note:-
1 - Air Valves are Considered to be provided at 500 m c/c and at High Points.
2 - Scour Valves are Provided at 2000 m c/c Distance.
3 - Above is Tentative Arrangement. Based on Actual Site Condition size, Quantity and Location of Proposed Valves May Vary.

| | | | | | | | | | | | | | | |
|---|---|---|---|---|---|---|---|---|---|---|---|---|---|---|
| | SIGN. | | | | | | | | | | | | | |
| | INITIALS | | | | | | | | | | | | | |
| | REVISIONS | | | | | | | | | | | | | |
| | SIGN. | | | | | | | | | | | | | |
| P0 | INITIALS | BSN | DG | DVB | | | | | | | MK | DK | 25-06-2022 | |
| | REVISIONS | | | | | | | | | | | | | |
| ISSUE | | DRN | DSN | CHD | CV | EL | IC | ME | | | PE/PM | APPD | DATE (dd-mm-yyyy) | |
| | | | | | CLEARED | | | | | | | | | |

'P' (PRELIMINARY) ISSUES ARE NOT TO BE USED FOR CONSTRUCTION / FABRICATION BUT ARE ISSUED FOR LIMITED PURPOSES ONLY AS INDICATED IN THE SMALL BLOCK ABOVE THIS BLOCK.

CONSTRUCTION / FABRICATION WORK IS PERMITTED ON 'R' (RELEASED) ISSUES ONLY.

INFORMATION CONTAINED WITHIN 'HOLD' IS NOT RELEASED FOR CONSTUCTION / FABRICATION. FIELD MUST GET DESIGN OFFICE TO CLEAR 'HOLDS' IN TIME BEFORE PROCEEDING WITH ANY CONSTRUCTION/ FABRICATION WORK RELATED TO 'HOLDS'.

SIGN. OF CLIENT:-

| | | | |
|---|---|---|---|
| | | | |
| JE | AE | EE | SE |

PURPOSE : FOR TENDER ONLY

DO NOT SCALE

Proprietary Notice and Version Control This document contains confidential information for use only by the ' Client ' ; for the Project under consideration, which is provided for the sole purpose of permitting the recipient to evaluate the information submitted herewith. In consideration of receipt of this document; unless agreed to in contrary in the Contract; the recipient agrees to maintain such information in confidence and to not reproduce or otherwise disclose this information to any person outside the recipient's organisation; except that there is no obligation to maintain the confidentiality of any information which was known to the recipient prior to receipt of such information from Tata Consulting Engineers Limited, or becomes publicly known through no fault of recipient, or Tata Consulting Engineers Limited, or is received without obligation of confidentiality from a third party owing no obligation of confidentiality to Tata Consulting Engineers Limited. All information given under this version over rides all and any kind of offers, assumptions, deliverables and contracts submitted verbally (and subsequently communicated in writing) or in writing or otherwise given under any and all previous version/s.

FILE NAME 12503A-CV-33364-Rev-P0

DETAILED DESIGN CONSULTANCY, HP-SHIVA (PACKAGE-CS09)

IRRIGATION, HORTICULTURE, ORCHARDS AND VALUE CHAIN DEVELOPMENT

PROPOSED L-SECTION-LIS MANN KHAD

NADAUN BLOCK, HAMIRPUR DISTRICT

TATA CONSULTING ENGINEERS LIMITED

MUMBAI

| | | |
|---|---|---|
| SCALE : NTS | DWG NO. TCE.12503A-CV-3082-WS-33364 | ISSUE P0 |
| DC & DISC: DEL-CV | | |

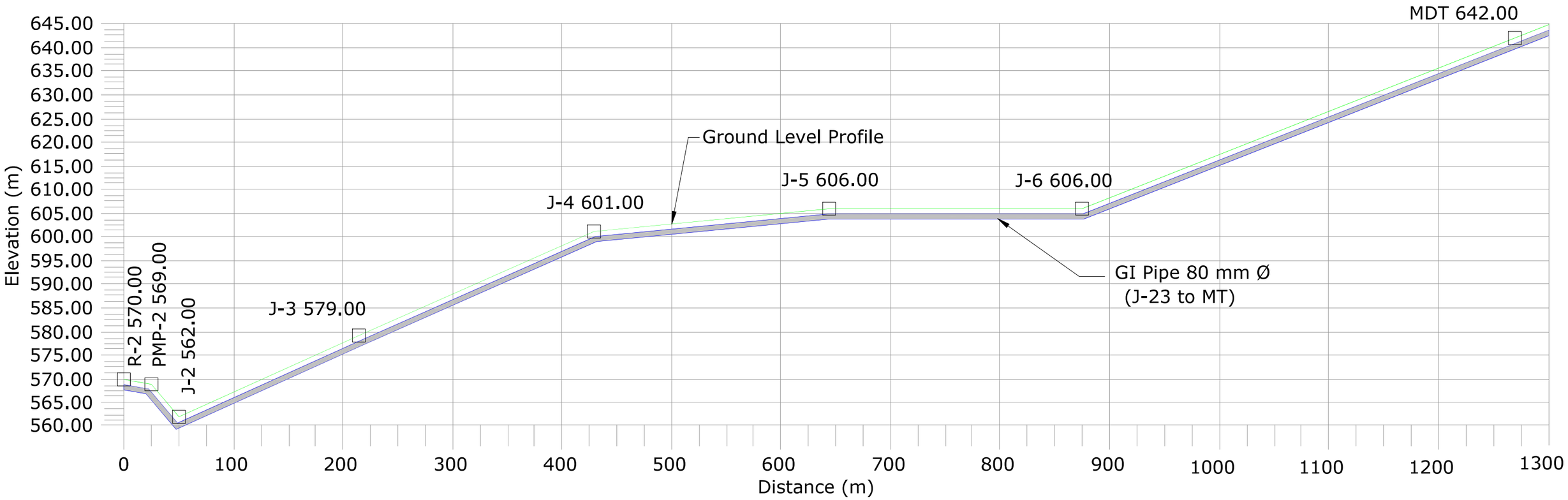


Legend :-
1. Ground Level
2. Rising Main
3. Junction
4. Air Valve
5. Scour Valve

Note:-
1 - Air Valves are Considered to be provided at 500 m c/c and at High Points.
2 - Scour Valves are Provided at 2000 m c/c Distance.
3 - Above is Tentative Arrangement. Based on Actual Site Condition size, Quantity and Location of Proposed Valves May Vary.

| | | | | | | | | | | | | | | |
|---|---|---|---|---|---|---|---|---|---|---|---|---|---|---|
| | SIGN. | | | | | | | | | | | | | |
| | INITIALS | | | | | | | | | | | | | |
| | REVISIONS | | | | | | | | | | | | | |
| P0 | SIGN. | | | | | | | | | | | | | 25-06-2022 |
| | INITIALS | BSN | DG | DVB | | | | | | | MK | DK | | |
| | REVISIONS | | | | | | | | | | | | | |
| ISSUE | | DRN | DSN | CHD | CV | EL | IC | ME | | | PE/PM | APPD | DATE (dd-mm-yyyy) | |
| | | | | | CLEARED | | | | | | | | | |

'P' (PRELIMINARY) ISSUES ARE NOT TO BE USED FOR CONSTRUCTION / FABRICATION BUT ARE ISSUED FOR LIMITED PURPOSES ONLY AS INDICATED IN THE SMALL BLOCK ABOVE THIS BLOCK.

CONSTRUCTION / FABRICATION WORK IS PERMITTED ON 'R' (RELEASED) ISSUES ONLY.

INFORMATION CONTAINED WITHIN 'HOLD' IS NOT RELEASED FOR CONSTUCTION / FABRICATION. FIELD MUST GET DESIGN OFFICE TO CLEAR 'HOLDS' IN TIME BEFORE PROCEEDING WITH ANY CONSTRUCTION/ FABRICATION WORK RELATED TO 'HOLDS'.

SIGN. OF CLIENT:-

| JE | AE | EE | SE |
|---|---|---|---|
| | | | |

PURPOSE : FOR TENDER ONLY

DO NOT SCALE

Proprietary Notice and Version Control This document contains confidential information for use only by the " Client " ; for the Project under consideration, which is provided for the sole purpose of permitting the recipient to evaluate the information submitted herewith. In consideration of receipt of this document; unless agreed to in contrary in the Contract; the recipient agrees to maintain such information in confidence and to not reproduce or otherwise disclose this information to any person outside the recipient's organisation; except that there is no obligation to maintain the confidentiality of any information which was known to the recipient prior to receipt of such information from Tata Consulting Engineers Limited, or becomes publicly known through no fault of recipient, or Tata Consulting Engineers Limited, or is received without obligation of confidentiality from a third party owing no obligation of confidentiality to Tata Consulting Engineers Limited. All information given under this version over rides all and any kind of offers, assumptions, deliverables and contracts submitted verbally (and subsequently communicated in writing) or in writing or otherwise given under any and all previous version/s.

FILE NAME 12503A-CV-33365-Rev-P0

DETAILED DESIGN CONSULTANCY, HP-SHIVA (PACKAGE-CS09)

IRRIGATION, HORTICULTURE, ORCHARDS AND VALUE CHAIN DEVELOPMENT

PROPOSED L-SECTION-LIS PANASAI

NADAUN BLOCK, HAMIRPUR DISTRICT

TATA CONSULTING ENGINEERS LIMITED

MUMBAI

| SCALE : NTS | DWG NO. TCE.12503A-CV-3082-WS-33365 | ISSUE P0 |
|---|---|---|
| DC & DISC: DEL-CV | | |

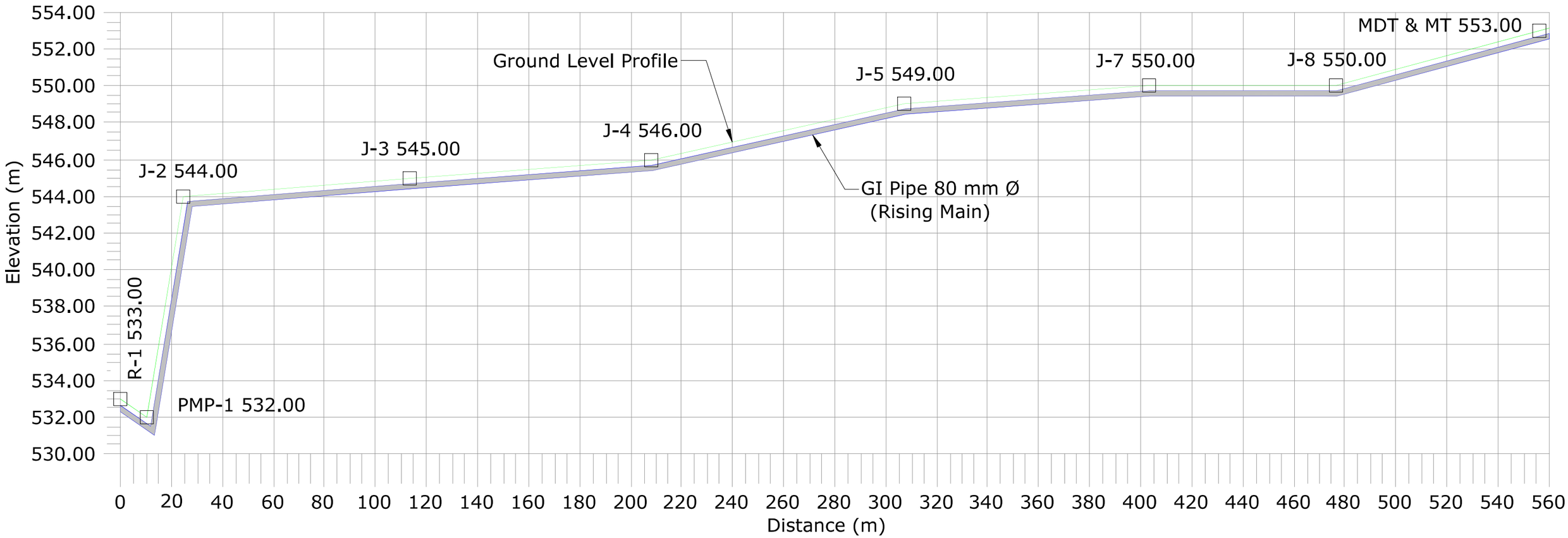


Legend :-
1. Ground Level
2. Rising Main
3. Junction
4. Air Valve
5. Scour Valve

Note:-
1 - Air Valves are Considered to be provided at 500 m c/c and at High Points.
2 - Scour Valves are Provided at 2000 m c/c Distance.
3 - Above is Tentative Arrangement. Based on Actual Site Condition size, Quantity and Location of Proposed Valves May Vary.

| | | | | | | | | | | | | | | |
|---|---|---|---|---|---|---|---|---|---|---|---|---|---|---|
| | SIGN. | | | | | | | | | | | | | |
| | INITIALS | | | | | | | | | | | | | |
| | REVISIONS | | | | | | | | | | | | | |
| P0 | SIGN. | | | | | | | | | | | | | 25-06-2022 |
| | INITIALS | BSN | DG | DVB | | | | | | | MK | DK | | |
| | REVISIONS | | | | | | | | | | | | | |
| ISSUE | | DRN | DSN | CHD | CV | EL | IC | ME | | | PE/PM | APPD | DATE (dd-mm-yyyy) | |
| | | | | | CLEARED | | | | | | | | | |

'P' (PRELIMINARY) ISSUES ARE NOT TO BE USED FOR CONSTRUCTION / FABRICATION BUT ARE ISSUED FOR LIMITED PURPOSES ONLY AS INDICATED IN THE SMALL BLOCK ABOVE THIS BLOCK.

CONSTRUCTION / FABRICATION WORK IS PERMITTED ON 'R' (RELEASED) ISSUES ONLY.

INFORMATION CONTAINED WITHIN 'HOLD' IS NOT RELEASED FOR CONSTUCTION / FABRICATION. FIELD MUST GET DESIGN OFFICE TO CLEAR 'HOLDS' IN TIME BEFORE PROCEEDING WITH ANY CONSTRUCTION/ FABRICATION WORK RELATED TO 'HOLDS'.

SIGN. OF CLIENT:-

| JE | AE | EE | SE |
|---|---|---|---|

PURPOSE : FOR TENDER ONLY

DO NOT SCALE

Proprietary Notice and Version Control This document contains confidential information for use only by the " Client " ; for the Project under consideration, which is provided for the sole purpose of permitting the recipient to evaluate the information submitted herewith. In consideration of receipt of this document; unless agreed to in contrary in the Contract; the recipient agrees to maintain such information in confidence and to not reproduce or otherwise disclose this information to any person outside the recipient's organisation; except that there is no obligation to maintain the confidentiality of any information which was known to the recipient prior to receipt of such information from Tata Consulting Engineers Limited, or becomes publicly known through no fault of recipient, or Tata Consulting Engineers Limited, or is received without obligation of confidentiality from a third party owing no obligation of confidentiality to Tata Consulting Engineers Limited. All information given under this version over rides all and any kind of offers, assumptions, deliverables and contracts submitted verbally (and subsequently communicated in writing) or in writing or otherwise given under any and all previous version/s.

FILE NAME 12503A-CV-33366-Rev-P0

DETAILED DESIGN CONSULTANCY, HP-SHIVA (PACKAGE-CS09)

IRRIGATION, HORTICULTURE, ORCHARDS AND VALUE CHAIN DEVELOPMENT

PROPOSED L-SECTION-LIS KHERI
SUJANPUR BLOCK, HAMIRPUR DISTRICT

TATA CONSULTING ENGINEERS LIMITED
MUMBAI

| SCALE : NTS | DWG NO. TCE.12503A-CV-3082-WS-33366 | ISSUE P0 |
|---|---|---|
| DC & DISC: DEL-CV | | |

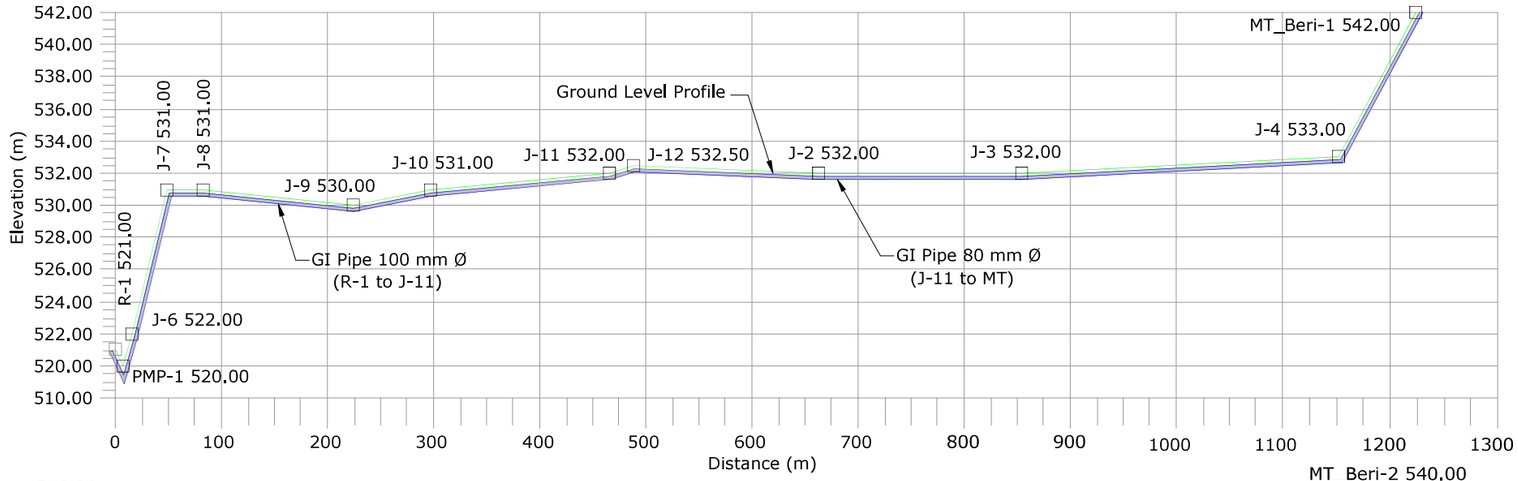


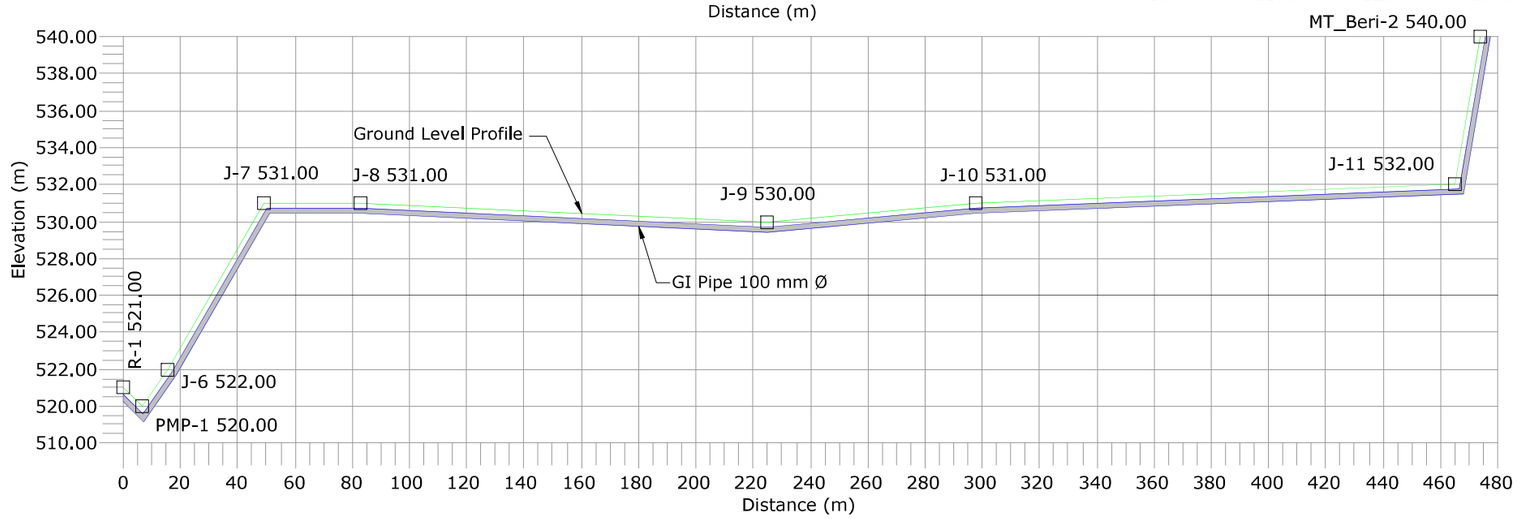


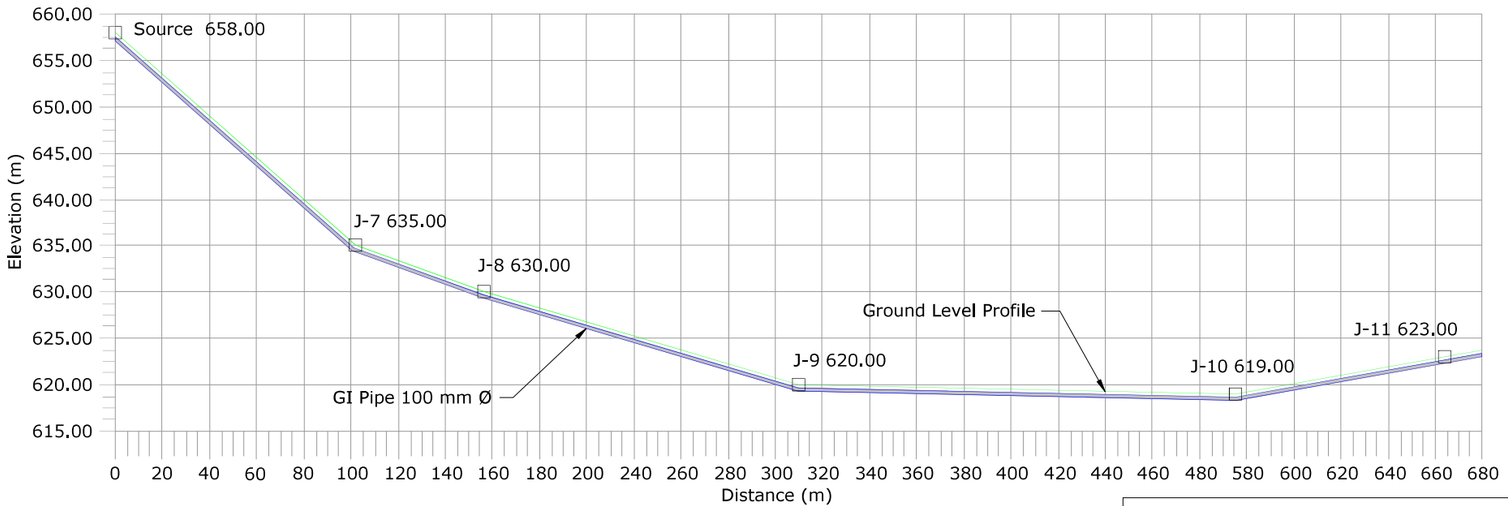


Legend :-

1. Ground Level
2. Rising Main
3. Junction
4. Air Valve
5. Scour Valve

Note:-

1 - Air Valves are Considered to be provided at 500 m c/c and at High Points.

2 - Scour Valves are Provided at 2000 m c/c Distance.

3 - Above is Tentative Arrangement. Based on Actual Site Condition size, Quantity and Location of Proposed Valves May Vary.

| ISSUE | | DRN | DSN | CHD | CV | EL | IC | ME | | | PE/PM | APPD | DATE (dd-mm-yyyy) |
|---|---|---|---|---|---|---|---|---|---|---|---|---|---|
| | SIGN. | | | | | | | | | | | | |
| | INITIALS | | | | | | | | | | | | |
| | REVISIONS | | | | | | | | | | | | |
| P0 | SIGN. | | | | | | | | | | | | 25-06-2022 |
| | INITIALS | BSN | DG | DVB | | | | | | | MK | DK | |
| | REVISIONS | | | | | | | | | | | | |
| | | | | | CLEARED | | | | | | | | |

'P' (PRELIMINARY) ISSUES ARE NOT TO BE USED FOR CONSTRUCTION / FABRICATION BUT ARE ISSUED FOR LIMITED PURPOSES ONLY AS INDICATED IN THE SMALL BLOCK ABOVE THIS BLOCK.

CONSTRUCTION / FABRICATION WORK IS PERMITTED ON 'R' (RELEASED) ISSUES ONLY.

INFORMATION CONTAINED WITHIN 'HOLD' IS NOT RELEASED FOR CONSTUCTION / FABRICATION. FIELD MUST GET DESIGN OFFICE TO CLEAR 'HOLDS' IN TIME BEFORE PROCEEDING WITH ANY CONSTRUCTION/ FABRICATION WORK RELATED TO 'HOLDS'.

SIGN. OF CLIENT:-

| JE | AE | EE | SE |
|---|---|---|---|
| | | | |

PURPOSE : FOR TENDER ONLY

DO NOT SCALE

Proprietary Notice and Version Control This document contains confidential information for use only by the " Client " ; for the Project under consideration, which is provided for the sole purpose of permitting the recipient to evaluate the information submitted herewith. In consideration of receipt of this document; unless agreed to in contrary in the Contract; the recipient agrees to maintain such information in confidence and to not reproduce or otherwise disclose this information to any person outside the recipient's organisation; except that there is no obligation to maintain the confidentiality of any information which was known to the recipient prior to receipt of such information from Tata Consulting Engineers Limited, or becomes publicly known through no fault of recipient, or Tata Consulting Engineers Limited, or is received without obligation of confidentiality from a third party owing no obligation of confidentiality to Tata Consulting Engineers Limited. All information given under this version over rides all and any kind of offers, assumptions, deliverables and contracts submitted verbally (and subsequently communicated in writing) or in writing or otherwise given under any and all previous version/s.

FILE NAME 12503A-CV-33367-Rev-P0

DETAILED DESIGN CONSULTANCY, HP-SHIVA (PACKAGE-CS09)

IRRIGATION, HORTICULTURE, ORCHARDS AND VALUE CHAIN DEVELOPMENT

PROPOSED L-SECTION-LIS KUDANA BERI

SUJANPUR BLOCK, HAMIRPUR DISTRICT

TATA CONSULTING ENGINEERS LIMITED

MUMBAI

| SCALE | DWG NO. | ISSUE |
|---|---|---|
| : NTS | TCE.12503A-CV-3082-WS-33367 | P0 |
| DC & DISC: DEL-CV | | |

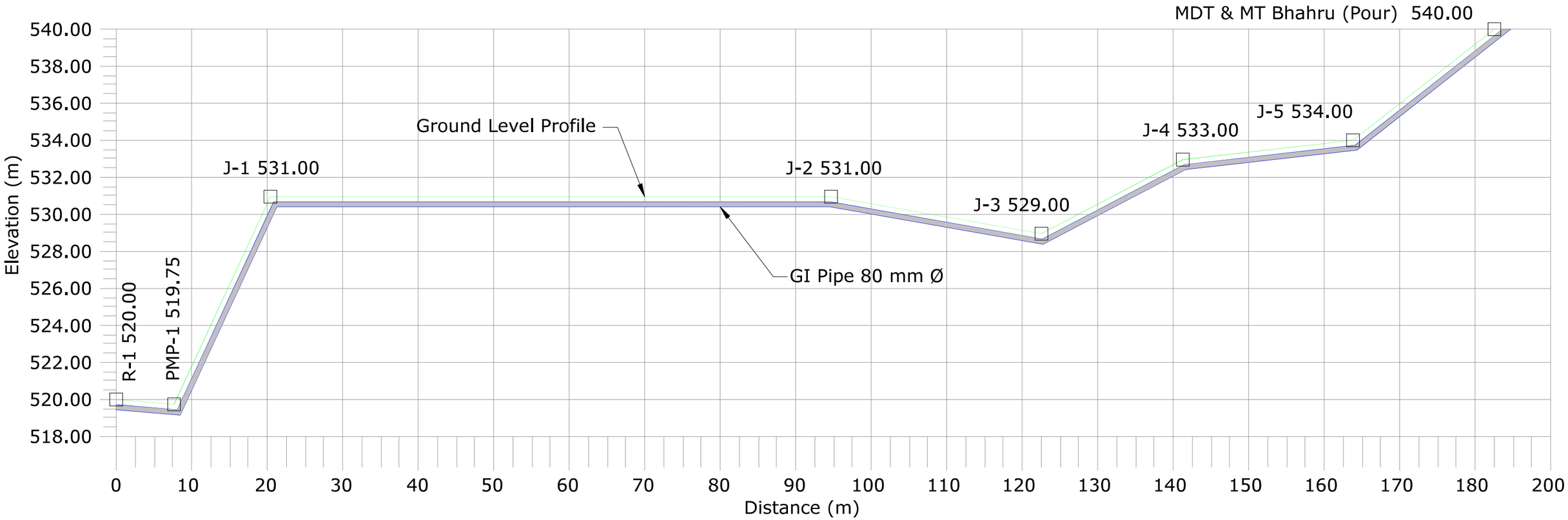


| | | | | | | | | | | | | | | |
|---|---|---|---|---|---|---|---|---|---|---|---|---|---|---|
| | SIGN. | | | | | | | | | | | | | |
| | INITIALS | | | | | | | | | | | | | |
| | REVISIONS | | | | | | | | | | | | | |
| P0 | SIGN. | | | | | | | | | | | | | 25-06-2022 |
| | INITIALS | BSN | DG | DVB | | | | | | | MK | DK | | |
| | REVISIONS | | | | | | | | | | | | | |
| ISSUE | | DRN | DSN | CHD | CV | EL | IC | ME | | | PE/PM | APPD | DATE (dd-mm-yyyy) | |
| | | | | | CLEARED | | | | | | | | | |

'P' (PRELIMINARY) ISSUES ARE NOT TO BE USED FOR CONSTRUCTION / FABRICATION BUT ARE ISSUED FOR LIMITED PURPOSES ONLY AS INDICATED IN THE SMALL BLOCK ABOVE THIS BLOCK.

CONSTRUCTION / FABRICATION WORK IS PERMITTED ON 'R' (RELEASED) ISSUES ONLY.

INFORMATION CONTAINED WITHIN 'HOLD' IS NOT RELEASED FOR CONSTUCTION / FABRICATION. FIELD MUST GET DESIGN OFFICE TO CLEAR 'HOLDS' IN TIME BEFORE PROCEEDING WITH ANY CONSTRUCTION/ FABRICATION WORK RELATED TO 'HOLDS'.

SIGN. OF CLIENT:-

| | | | |
|---|---|---|---|
| | | | |
| JE | AE | EE | SE |

PURPOSE : FOR TENDER ONLY

DO NOT SCALE

Proprietary Notice and Version Control This document contains confidential information for use only by the " Client " ; for the Project under consideration, which is provided for the sole purpose of permitting the recipient to evaluate the information submitted herewith. In consideration of receipt of this document; unless agreed to in contrary in the Contract; the recipient agrees to maintain such information in confidence and to not reproduce or otherwise disclose this information to any person outside the recipient's organisation; except that there is no obligation to maintain the confidentiality of any information which was known to the recipient prior to receipt of such information from Tata Consulting Engineers Limited, or becomes publicly known through no fault of recipient, or Tata Consulting Engineers Limited, or is received without obligation of confidentiality from a third party owing no obligation of confidentiality to Tata Consulting Engineers Limited. All information given under this version over rides all and any kind of offers, assumptions, deliverables and contracts submitted verbally (and subsequently communicated in writing) or in writing or otherwise given under any and all previous version/s.

FILE NAME 12503A-CV-33368-Rev-P0

DETAILED DESIGN CONSULTANCY, HP-SHIVA (PACKAGE-CS09)

IRRIGATION, HORTICULTURE, ORCHARDS AND VALUE CHAIN DEVELOPMENT

PROPOSED L-SECTION-LIS BHAHRU JATOUR

SUJANPUR BLOCK, HAMIRPUR DISTRICT

TATA CONSULTING ENGINEERS LIMITED

MUMBAI

| | | |
|---|---|---|
| SCALE : NTS | DWG NO. TCE.12503A-CV-3082-WS-33368 | ISSUE P0 |
| DC & DISC : DEL-CV | | |

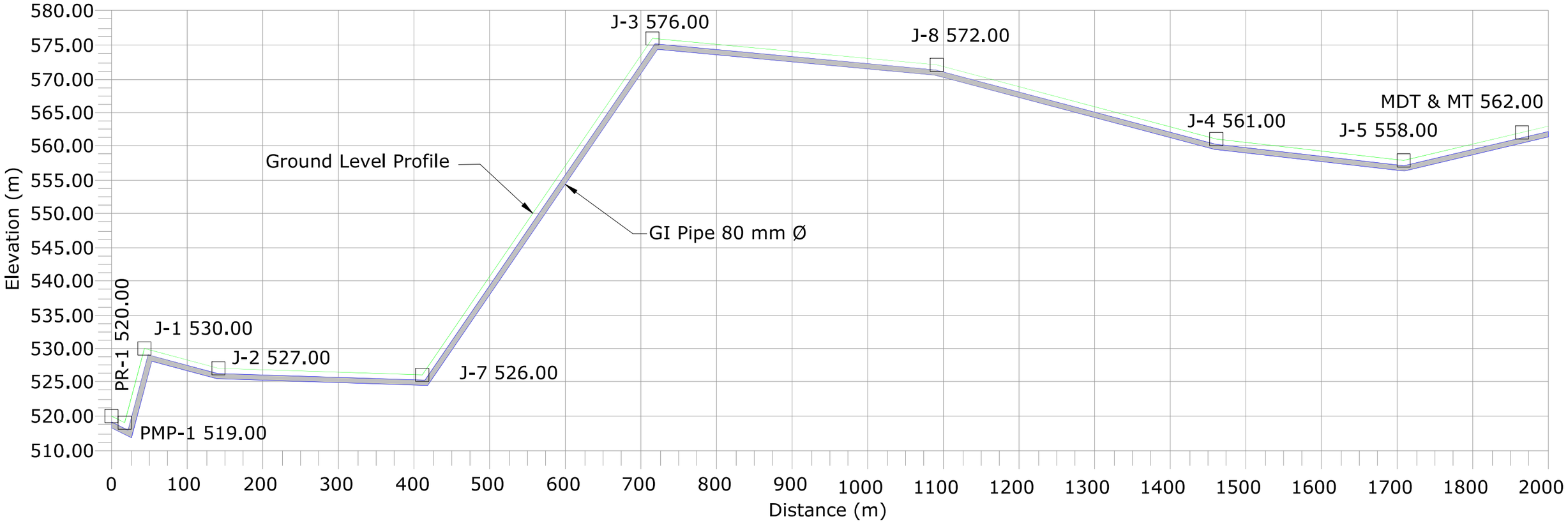


| | | | | | | | | | | | | | | |
|---|---|---|---|---|---|---|---|---|---|---|---|---|---|---|
| | SIGN. | | | | | | | | | | | | | |
| | INITIALS | | | | | | | | | | | | | |
| | REVISIONS | | | | | | | | | | | | | |
| P0 | SIGN. | | | | | | | | | | | | | 25-06-2022 |
| | INITIALS | BSN | DG | DVB | | | | | | | MK | DK | | |
| | REVISIONS | | | | | | | | | | | | | |
| ISSUE | | DRN | DSN | CHD | CV | EL | IC | ME | | | PE/PM | APPD | DATE (dd-mm-yyyy) | |
| | | | | | CLEARED | | | | | | | | | |

'P' (PRELIMINARY) ISSUES ARE NOT TO BE USED FOR CONSTRUCTION / FABRICATION BUT ARE ISSUED FOR LIMITED PURPOSES ONLY AS INDICATED IN THE SMALL BLOCK ABOVE THIS BLOCK.

CONSTRUCTION / FABRICATION WORK IS PERMITTED ON 'R' (RELEASED) ISSUES ONLY.

INFORMATION CONTAINED WITHIN 'HOLD' IS NOT RELEASED FOR CONSTUCTION / FABRICATION. FIELD MUST GET DESIGN OFFICE TO CLEAR 'HOLDS' IN TIME BEFORE PROCEEDING WITH ANY CONSTRUCTION/ FABRICATION WORK RELATED TO 'HOLDS'.

SIGN. OF CLIENT:–

| | | | |
|---|---|---|---|
| | | | |
| JE | AE | EE | SE |

PURPOSE : FOR TENDER ONLY

DO NOT SCALE

Proprietary Notice and Version Control This document contains confidential information for use only by the " Client " ; for the Project under consideration, which is provided for the sole purpose of permitting the recipient to evaluate the information submitted herewith. In consideration of receipt of this document; unless agreed to in contrary in the Contract; the recipient agrees to maintain such information in confidence and to not reproduce or otherwise disclose this information to any person outside the recipient's organisation; except that there is no obligation to maintain the confidentiality of any information which was known to the recipient prior to receipt of such information from Tata Consulting Engineers Limited, or becomes publicly known through no fault of recipient, or Tata Consulting Engineers Limited, or is received without obligation of confidentiality from a third party owing no obligation of confidentiality to Tata Consulting Engineers Limited. All information given under this version over rides all and any kind of offers, assumptions, deliverables and contracts submitted verbally (and subsequently communicated in writing) or in writing or otherwise given under any and all previous version/s.

FILE NAME 12503A–CV–33369–Rev–P0

DETAILED DESIGN CONSULTANCY, HP–SHIVA (PACKAGE–CS09)

IRRIGATION, HORTICULTURE, ORCHARDS AND VALUE CHAIN DEVELOPMENT

PROPOSED L–SECTION–LIS POUR

SUJANPUR BLOCK, HAMIRPUR DISTRICT

TATA CONSULTING ENGINEERS LIMITED

MUMBAI

| | | |
|---|---|---|
| SCALE : NTS | DWG NO. TCE.12503A–CV–3082–WS–33369 | ISSUE P0 |
| DC & DISC: DEL–CV | | |

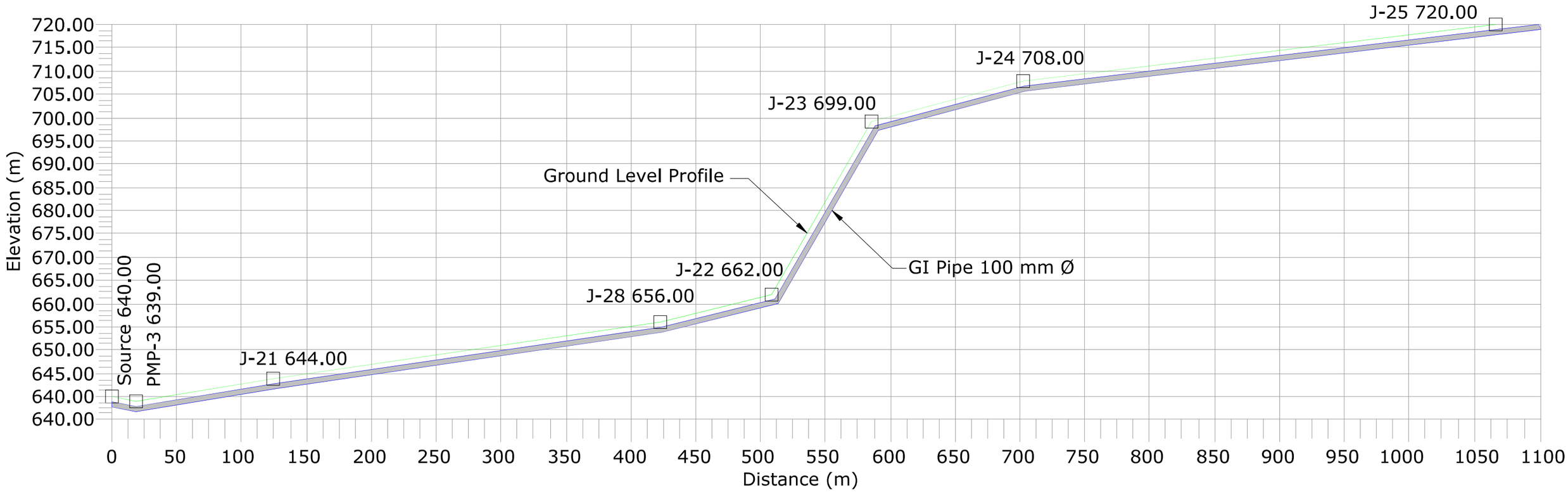


| | | | | | | | | | | | | | |
|---|---|---|---|---|---|---|---|---|---|---|---|---|---|
| | SIGN. | | | | | | | | | | | | |
| | INITIALS | | | | | | | | | | | | |
| | REVISIONS | | | | | | | | | | | | |
| P0 | SIGN. | | | | | | | | | | | | 25-06-2022 |
| | INITIALS | BSN | DG | DVB | | | | | | | MK | DK | |
| | REVISIONS | | | | | | | | | | | | |
| ISSUE | | DRN | DSN | CHD | CV | EL | IC | ME | | | PE/PM | APPD | DATE (dd-mm-yyyy) |
| | | | | | CLEARED | | | | | | | | |

'P' (PRELIMINARY) ISSUES ARE NOT TO BE USED FOR CONSTRUCTION / FABRICATION BUT ARE ISSUED FOR LIMITED PURPOSES ONLY AS INDICATED IN THE SMALL BLOCK ABOVE THIS BLOCK.

CONSTRUCTION / FABRICATION WORK IS PERMITTED ON 'R' (RELEASED) ISSUES ONLY.

INFORMATION CONTAINED WITHIN 'HOLD' IS NOT RELEASED FOR CONSTUCTION / FABRICATION. FIELD MUST GET DESIGN OFFICE TO CLEAR 'HOLDS' IN TIME BEFORE PROCEEDING WITH ANY CONSTRUCTION/ FABRICATION WORK RELATED TO 'HOLDS'.

SIGN. OF CLIENT:-

| | | | |
|---|---|---|---|
| | | | |
| JE | AE | EE | SE |

PURPOSE : FOR TENDER ONLY

DO NOT SCALE

Proprietary Notice and Version Control This document contains confidential information for use only by the " Client " ; for the Project under consideration, which is provided for the sole purpose of permitting the recipient to evaluate the information submitted herewith. In consideration of receipt of this document; unless agreed to in contrary in the Contract; the recipient agrees to maintain such information in confidence and to not reproduce or otherwise disclose this information to any person outside the recipient's organisation; except that there is no obligation to maintain the confidentiality of any information which was known to the recipient prior to receipt of such information from Tata Consulting Engineers Limited, or becomes publicly known through no fault of recipient, or Tata Consulting Engineers Limited, or is received without obligation of confidentiality from a third party owing no obligation of confidentiality to Tata Consulting Engineers Limited. All information given under this version over rides all and any kind of offers, assumptions, deliverables and contracts submitted verbally (and subsequently communicated in writing) or in writing or otherwise given under any and all previous version/s.

FILE NAME 12503A-CV-33370-Rev-P0

DETAILED DESIGN CONSULTANCY, HP-SHIVA (PACKAGE-CS09)

IRRIGATION, HORTICULTURE, ORCHARDS AND VALUE CHAIN DEVELOPMENT

PROPOSED L-SECTION-LIS PUNG KHAD

SUJANPUR BLOCK, HAMIRPUR DISTRICT

TATA CONSULTING ENGINEERS LIMITED

MUMBAI

| | | | |
|---|---|---|---|
| SCALE : NTS | DWG NO. TCE.12503A-CV-3082-WS-33370 | ISSUE P0 |
| DC & DISC: DEL-CV | | |

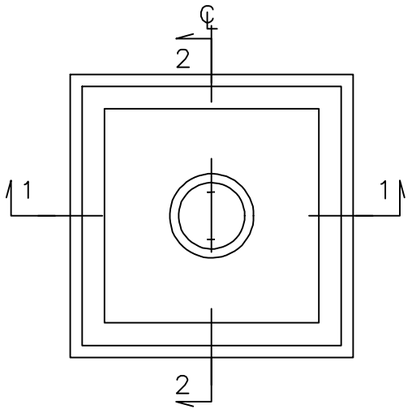


TOP PLAN

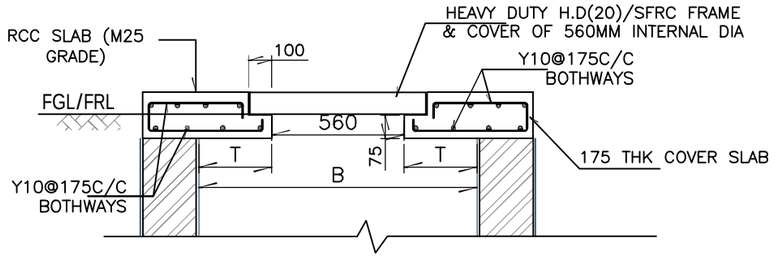


DETAIL A

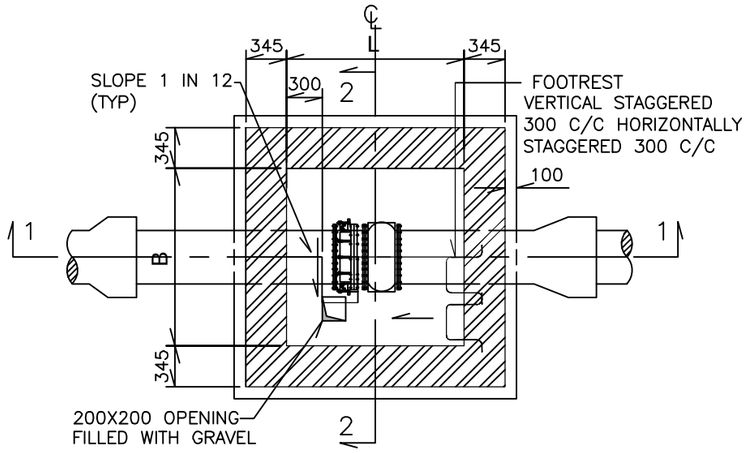


SECTIONAL PLAN

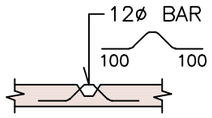


LIFTING HOOK DETAIL

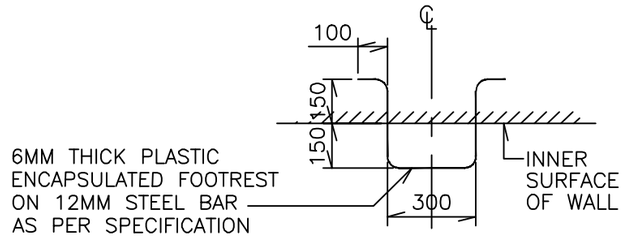


TYPICAL DETAILS OF ACCESS RUNGS

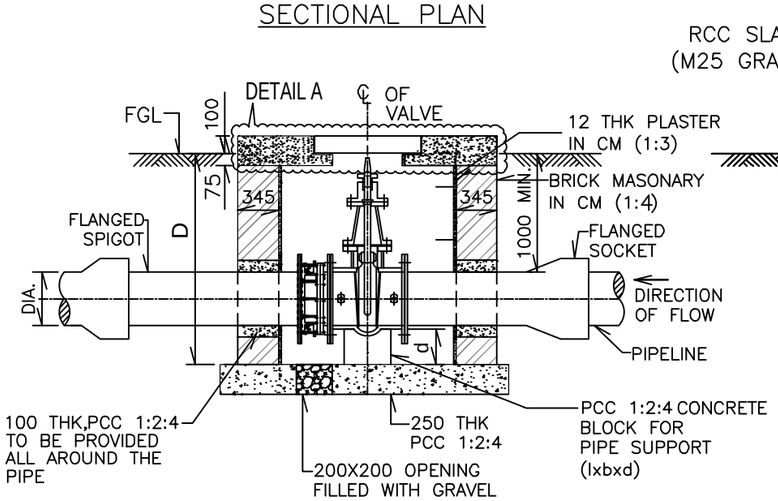


SECTION 1–1

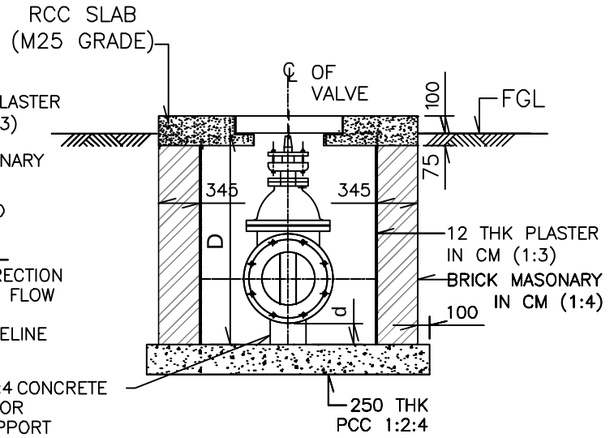


SECTION 2–2

## LEGEND

| | | |
|---|---|---|
| TYP | — — — | TYPICAL |
| DIA | — — — | DIAMETER |
| UN | — — — | UNLESS NOTED |
| MS | — — — | MILD STEEL |
| DI | — — — | DUCTILE IRON |
| THK | — — — | THICK |
| ℄ | — — — | CENTER LINE |
| IL | — — — | INVERT LEVEL |
| PCC | — — — | PLAIN CEMENT CONCRETE |
| RC | — — — | REINFORCED CONCRETE |
| EQ. | — — — | EQUAL |

## NOTES:

1. ALL DIMENSIONS ARE IN MILLIMETRE AND LEVELS IN METRE UNLESS NOTED.
2. GRADE OF PCC SHALL BE M15 WITH MAXIMUM 40mm DOWN GRADED AGGREGATES CONFORMING TO SPECIFICATION.
3. REINFORCEMENT SHALL BE HIGH YIELD STRENGTH DEFORMED BARS TO GRADE Fe500 CONFORMING TO IS:1786 (LATEST ISSUE).
4. CLEAR COVER TO MAIN REINFORCEMENT SHALL BE AS FOLLOWS. RC COVER–20mm TOP & BOTTOM
5. SAFE BEARING CAPACITY OF SOIL IS CONSIDERED AS 15 T/Sqm. AT FOUNDING LEVEL.
6. THE ARRANGEMENT RELATED TO VALVE AND FITTINGS SHOWN IN THE DRAWING ARE INDICATIVE ONLY. BEFORE CONSTRUCTION, ARRANGEMENT OF VALVE AND FITTINGS SHALL BE PROVIDED BY THE CONTRACTOR TO ENGINEER FOR APPROVAL.
7. BRICK MASONRY SHALL BE IN CM (1:4).
8. BRICKS SHALL BE OF MINIMUM 75 Kg/cm$^2$ COMPRESSIVE STRENGTH.
9. THE TYPICAL DETAILS OF CHAMBER ARE APPLICABLE FOR 150mm TO 600mm DIA PIPELINE.
10. VALVE CHAMBERS SHALL BE CONSTRUCTED IN RCC IN CASE HIGH WATER TABLE AND SPACE CONSTRAINT.
11. THE FOOTREST SHALL BE PROVIDED FROM TOP COVER TO PIPE BARREL TOP AND THEN PIPE BARREL TOP UPTO 300mm ABOVE CHAMBER BOTTOM.
12. VALVE SPINDLE EXTENSIONS TO BE FITTED TO BRING TOP OF VALVE SPINDLE TO WITHIN 100mm TO UNDERSIDE OF RC COVER.

## TABLE:

| DIA. OF PIPE | CHAMBER SIZE | | | PEDESTAL | | |
|---|---|---|---|---|---|---|
| | L | B | D | l | b | d (Min) |
| 300 | 1200 | 1200 | 1600 | 150 | 250 | 100 |
| 200 | 1200 | 1200 | 1600 | 100 | 200 | 100 |
| 150 | 900 | 900 | 1600 | 100 | 150 | 100 |

| | | | | | | | | | | | | | |
|---|---|---|---|---|---|---|---|---|---|---|---|---|---|
| | SIGN. | | | | | | | | | | | | |
| | INITIALS | | | | | | | | | | | | |
| | REVISIONS | | | | | | | | | | | | |
| P0 | SIGN. | | | | | | | | | | | | |
| | INITIALS | SM | MJ | DVP | | | | | | | NMS | NMS | 15-04-2022 |
| | REVISIONS | | | | | | | | | | | | |
| ISSUE | | DRN | DSN | CHD | CV | EL | IC | ME | | | PE/PM | APPD | DATE (dd-mm-yyyy) |
| | | | | | CLEARED | | | | | | | | |

'P' (PRELIMINARY) ISSUES ARE NOT TO BE USED FOR CONSTRUCTION / FABRICATION BUT ARE ISSUED FOR LIMITED PURPOSES ONLY AS INDICATED IN THE SMALL BLOCK ABOVE THIS BLOCK.

CONSTRUCTION / FABRICATION WORK IS PERMITTED ON 'R' (RELEASED) ISSUES ONLY.

INFORMATION CONTAINED WITHIN 'HOLD' IS NOT RELEASED FOR CONSTUCTION / FABRICATION. FIELD MUST GET DESIGN OFFICE TO CLEAR 'HOLDS' IN TIME BEFORE PROCEEDING WITH ANY CONSTRUCTION/ FABRICATION WORK RELATED TO 'HOLDS'.

SIGN. OF CLIENT:–

| JE | AE | EE | SE |
|---|---|---|---|
| | | | |

PURPOSE : FOR TENDER ONLY

DO NOT SCALE

Proprietary Notice and Version Control This document contains confidential information for use only by the "Client"; for the Project under consideration, which is provided for the sole purpose of permitting the recipient to evaluate the information submitted herewith. In consideration of receipt of this document; unless agreed to in contrary in the Contract; the recipient agrees to maintain such information in confidence and to not reproduce or otherwise disclose this information to any person outside the recipient's organisation; except that there is no obligation to maintain the confidentiality of any information which was known to the recipient prior to receipt of such information from Tata Consulting Engineers Limited, or becomes publicly known through no fault of recipient, or Tata Consulting Engineers Limited, or is received without obligation of confidentiality from a third party owing no obligation of confidentiality to Tata Consulting Engineers Limited. All information given under this version over rides all and any kind of offers, assumptions, deliverables and contracts submitted verbally (and subsequently communicated in writing) or in writing or otherwise given under any and all previous version/s.

FILE NAME 12503A–CV–30581–Rev–P0

DETAILED DESIGN CONSULTANCY, HP–SHIVA (PACKAGE CS09)

IRRIGATION, HORTICULTURE, ORCHARDS AND VALUE CHAIN DEVELOPMENT

TYPICAL SLUICE VALVE CHAMBER DETAILS

TATA CONSULTING ENGINEERS LIMITED

MUMBAI

| SCALE : NTS | DWG NO. TCE.12503A–CV–3082–WS–30581 | ISSUE P0 |
|---|---|---|
| DC & DISC: DEL–CV | | |

SIZE–A3

FILE NAME: F–093–Rev–R1.DWG

TCE FORM NO. 093 R1

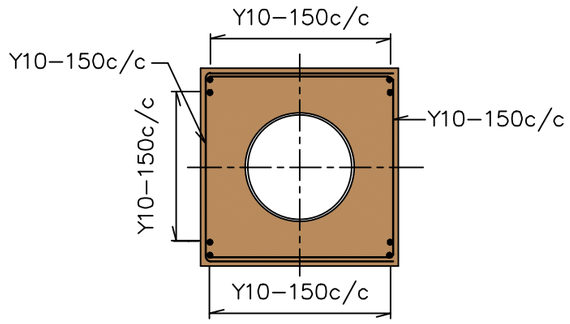


DETAILS OF CONCRETE BED & ENCASEMENT OF PIPE

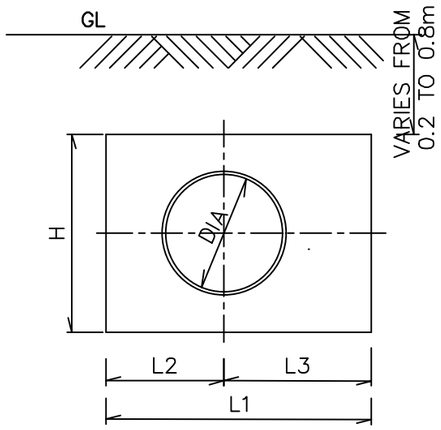


SECTION 1–1

## TABLE

| INTERNAL DIAMETER OF PIPE (mm) | ANGLE OF BEND | DESIGN PRESSURE ($kg/m^2$) | SOIL COVER OVER PIPE Ds (mm) | H (m) | L1 (m) | L2 (m) | L3 (m) | L (m) | B1 (m) | B2 (m) |
|---|---|---|---|---|---|---|---|---|---|---|
| 100 | 90° | 4.35 | 1000 | 0.70 | 0.75 | 0.40 | 0.35 | 0.77 | 0.70 | 0.35 |
| 100 | 45° | 4.35 | 1000 | 0.60 | 0.55 | 0.30 | 0.25 | 0.57 | 0.60 | 0.30 |
| 100 | 22.5° | 4.35 | 1000 | 0.45 | 0.45 | 0.25 | 0.20 | 0.46 | 0.50 | 0.25 |
| 100 | 90° | 4.85 | 1000 | 0.70 | 0.80 | 0.45 | 0.35 | 0.82 | 0.70 | 0.35 |
| 100 | 45° | 4.85 | 1000 | 0.60 | 0.55 | 0.30 | 0.25 | 0.57 | 0.60 | 0.30 |
| 100 | 22.5° | 4.85 | 1000 | 0.50 | 0.45 | 0.25 | 0.20 | 0.47 | 0.50 | 0.25 |
| 100 | 90° | 5.93 | 1000 | 0.80 | 0.75 | 0.40 | 0.35 | 0.78 | 0.80 | 0.40 |
| 100 | 45° | 5.93 | 1000 | 0.65 | 0.65 | 0.35 | 0.30 | 0.67 | 0.70 | 0.35 |
| 100 | 22.5° | 5.93 | 1000 | 0.50 | 0.55 | 0.30 | 0.25 | 0.56 | 0.50 | 0.25 |
| 150 | 90° | 3.33 | 1000 | 0.85 | 0.85 | 0.45 | 0.40 | 0.88 | 0.90 | 0.45 |
| 150 | 45° | 3.33 | 1000 | 0.70 | 0.70 | 0.40 | 0.30 | 0.72 | 0.70 | 0.35 |
| 150 | 22.5° | 3.33 | 1000 | 0.55 | 0.55 | 0.30 | 0.25 | 0.57 | 0.50 | 0.25 |
| 250 | 90° | 3.75 | 1000 | 1.25 | 1.25 | 0.70 | 0.55 | 1.29 | 1.30 | 0.65 |
| 250 | 45° | 3.75 | 1000 | 1.00 | 1.05 | 0.60 | 0.45 | 1.08 | 1.00 | 0.50 |
| 250 | 22.5° | 3.75 | 1000 | 0.80 | 0.80 | 0.45 | 0.35 | 0.82 | 0.80 | 0.40 |
| 250 | 90° | 6.03 | 1000 | 1.45 | 1.45 | 0.80 | 0.65 | 1.49 | 1.50 | 0.75 |
| 250 | 45° | 6.03 | 1000 | 1.15 | 1.25 | 0.70 | 0.55 | 1.28 | 1.10 | 0.55 |
| 250 | 22.5° | 6.03 | 1000 | 0.95 | 0.90 | 0.50 | 0.40 | 0.93 | 0.90 | 0.45 |
| 350 | 90° | 5.93 | 1000 | 1.80 | 1.80 | 1.00 | 0.80 | 1.86 | 1.80 | 0.90 |
| 350 | 45° | 5.93 | 1000 | 1.45 | 1.55 | 0.85 | 0.70 | 1.59 | 1.50 | 0.75 |
| 350 | 22.5° | 5.93 | 1000 | 1.20 | 1.15 | 0.65 | 0.50 | 1.19 | 1.20 | 0.60 |
| 500 | 90° | 4.68 | 1000 | 2.15 | 2.05 | 1.15 | 0.90 | 2.12 | 2.20 | 1.10 |
| 500 | 45° | 4.68 | 1000 | 1.70 | 1.80 | 1.00 | 0.80 | 1.85 | 1.70 | 0.85 |
| 500 | 22.5° | 4.68 | 1000 | 1.40 | 1.35 | 0.75 | 0.60 | 1.39 | 1.40 | 0.70 |

## LEGEND:

DIA ——— DIAMETER
B ——— BREADTH
L ——— LENGTH
H ——— HEIGHT
mm ——— MILLIMETERS

## NOTES:

1. ALL DIMENSIONS ARE IN MILLIMETRES AND LEVELS IN METRES UNLESS NOTED.
2. INVERT LEVEL OF PIPES SHALL BE AS PER RELEVANT NETWORK DRAWINGS.
3. NO CONCRETE SHALL BE PLACED AROUND JOINTS OF PIPELINE, UNTIL THAT LENGTH OF PIPE HAS PASSED SECTIONAL HYDRAULIC TEST.
4. STEEL FOR REINFORCEMENT SHALL BE HIGH YIELD STRENGTH DEFORMED BARS OF GRADE Fe 500
5. REINFORCEMENT LAP LENGTHS SHALL BE 50xDIAMETER OF SMALLER BAR.
6. CONCRETE TO BE USED SHALL BE OF GRADE M20 WITH 20mm DOWN GRADED AGGRAGATES CONFORMING TO SPECIFICATIONS.
7. CLEAR COVER TO REINFORCEMENT BOTTOM AND SIDES – 30mm
8. DURING CONSTRUCTION, IF GROUND WATER TABLE IS MET WITH, IT SHALL BE BROUGHT TO THE NOTICE OF ENGINEER FOR MAKING NECESSARY CHANGES IN THE DESIGN.
9. SOIL BENEATH AND BY THE SIDE OF THE THRUST BLOCK, WHICH ULTIMATELY BEARS THRUST THROUGH CONCRETE MEDIUM, MUST REMAIN UNDISTURBED. IN CASE ANY EXTRA EXCAVATION IS DONE IN TRENCHES, WHERE THE THRUST BLOCK IS TO BE PROVIDED, THE SAME SHALL BE FILLED WITH 1:4:8 CONCRETE
10. PIPES AND SPECIALS SHALL BE SUITABLY SUPPORTED WHILE CONCRETING THE THRUST BLOCK AS DIRECTED BY ENGINEER.
11. TESTING OF MAINS SHALL BE DONE AFTER CASTING OF THRUST BLOCKS AND COMPACTION OF BACKFILLING.
12. AT THE TIME OF TESTING, COMPACTED SOIL SHALL BE PLACED ON THE THRUST BLOCK UP TO THE ROAD LEVEL.
13. THRUST BLOCKS NEED TO BE PLACED AS PER SITE CONDITION

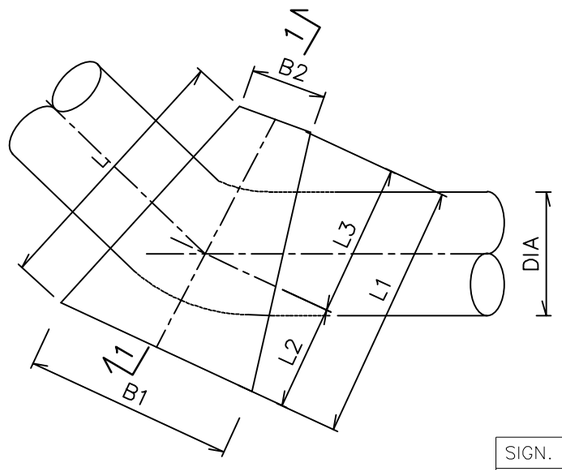


TYPICAL THRUST BLOCK

| | | | | | | | | | | | | | | |
|---|---|---|---|---|---|---|---|---|---|---|---|---|---|---|
| | SIGN. | | | | | | | | | | | | | |
| | INITIALS | | | | | | | | | | | | | |
| | REVISIONS | | | | | | | | | | | | | |
| P0 | SIGN. | | | | | | | | | | | | | |
| | INITIALS | SM | MJ | DVP | | | | | | | NMS | NMS | 15-04-2022 |
| | REVISIONS | | | | | | | | | | | | | |
| ISSUE | | DRN | DSN | CHD | CV | EL | IC | ME | | | PE/PM | APPD | DATE (dd-mm-yyyy) |
| | | | | | CLEARED | | | | | | | | |

'P' (PRELIMINARY) ISSUES ARE NOT TO BE USED FOR CONSTRUCTION / FABRICATION BUT ARE ISSUED FOR LIMITED PURPOSES ONLY AS INDICATED IN THE SMALL BLOCK ABOVE THIS BLOCK.

CONSTRUCTION / FABRICATION WORK IS PERMITTED ON 'R' (RELEASED) ISSUES ONLY.

INFORMATION CONTAINED WITHIN 'HOLD' IS NOT RELEASED FOR CONSTUCTION / FABRICATION. FIELD MUST GET DESIGN OFFICE TO CLEAR 'HOLDS' IN TIME BEFORE PROCEEDING WITH ANY CONSTRUCTION/ FABRICATION WORK RELATED TO 'HOLDS'.

SIGN. OF CLIENT:–

| | | | |
|---|---|---|---|
| | | | |
| JE | AE | EE | SE |

PURPOSE : FOR TENDER ONLY

DO NOT SCALE

Proprietary Notice and Version Control This document contains confidential information for use only by the " Client " ; for the Project under consideration, which is provided for the sole purpose of permitting the recipient to evaluate the information submitted herewith. In consideration of receipt of this document; unless agreed to in contrary in the Contract; the recipient agrees to maintain such information in confidence and to not reproduce or otherwise disclose this information to any person outside the recipient's organisation; except that there is no obligation to maintain the confidentiality of any information which was known to the recipient prior to receipt of such information from Tata Consulting Engineers Limited, or becomes publicly known through no fault of recipient, or Tata Consulting Engineers Limited, or is received without obligation of confidentiality from a third party owing no obligation of confidentiality to Tata Consulting Engineers Limited. All information given under this version over rides all and any kind of offers, assumptions, deliverables and contracts submitted verbaly (and subsequently communicated in writing) or in writing or otherwise given under any and all previous version/s.

FILE NAME 12503A–CV–30582–Rev–P0

DETAILED DESIGN CONSULTANCY, HP–SHIVA (PACKAGE CS09)

IRRIGATION, HORTICULTURE, ORCHARDS AND VALUE CHAIN DEVELOPMENT

TYPICAL DETAILS OF THRUST BLOCK

TATA CONSULTING ENGINEERS LIMITED

MUMBAI

| | | | |
|---|---|---|---|
| SCALE : NTS | DWG NO. TCE.12503A–CV–3082–WS–30582 | | ISSUE P0 |
| DC & DISC: DEL–CV | | | |

SIZE:A3

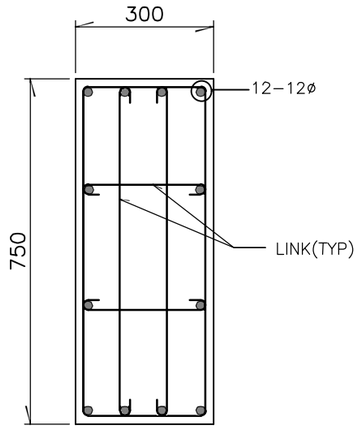


SEC 1-1

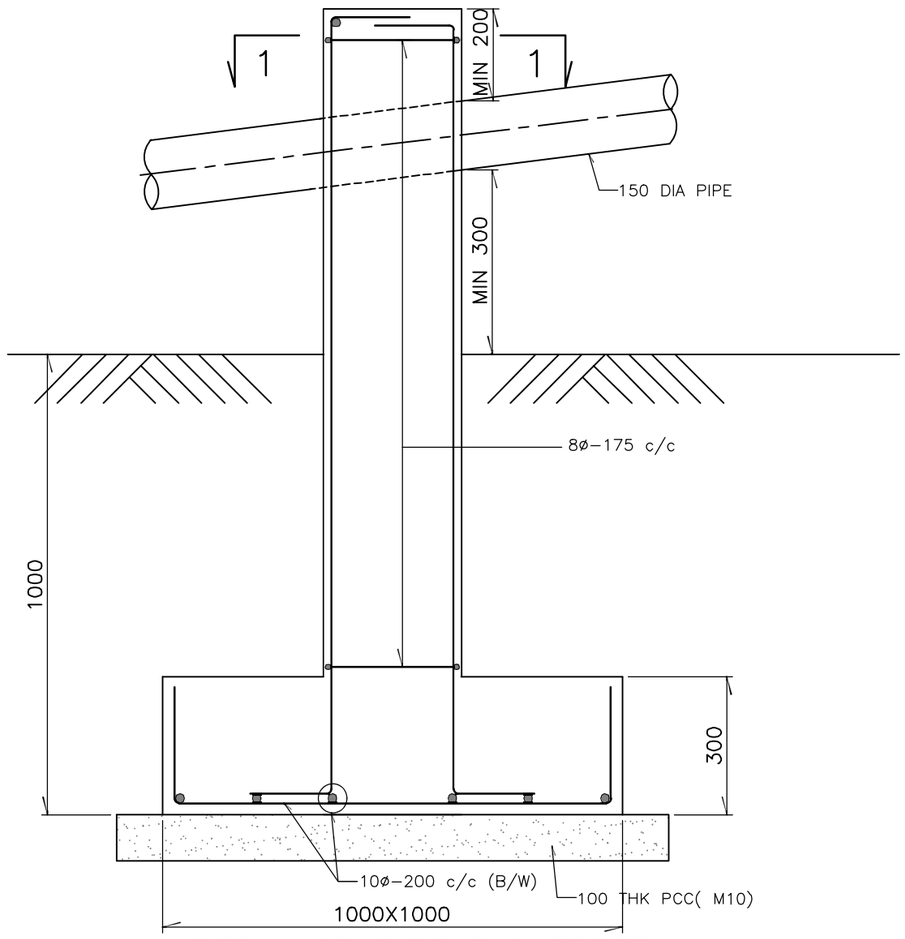


DETAIL OF SADDLE SUPPORT

## LEGEND

DIA --- DIAMETER
C/C --- CENTRE TO CENTRE
THK --- THICK
B/W --- BOTHWAYS
PCC --- PLAIN CEMENT CONCRETE
TYP --- TYPICAL

## NOTES:

1. ALL DIMENSIONS ARE IN MILLIMETRES AND LEVELS IN METRES UNLESS NOTED.
2. DO NOT SCALE THE DRAWING. FOLLOW FIGURED DIMENSIONS ONLY.
3. GRADE OF CONCRETE SHALL BE M30 WITH MAXIMUM 20mm DOWNGRADED AGGREGATES CONFORMING TO IS 456.
4. STEEL FOR REINFORCEMENT SHALL BE HIGH YIELD STRENGTH DEFORMED BARS OF GRADE FE-500 CONFORMING TO IS:1786.
5. SAFE BEARING CAPACITY OF SOIL IS TAKEN AS 10T/Sq.m. AT FOUNDING LEVEL AND SAME IS TO BE CONFIRMED AT SITE BEFORE EXECUTION.
6. PLAIN CEMENT CONCRETE UNDER FOUNDATION SHALL BE OF GRADE M10 CONFORMING TO IS 456.
7. IF ANY LOOSE SOIL IS ENCOUNTERED AT FOUNDING LEVEL DURING CONSTRUCTION, IT SHOULD BE BROUGHT TO THE NOTICE OF THE ENGINEER.
8. IF GROUND WATER TABLE IS ENCOUNTERED DURING CONSTRUCTION, IT SHOULD BE BROUGHT TO THE NOTICE OF THE ENGINEER FOR MAKING APPROPRIATE CHANGES IN THE DESIGN.
9. THE SPACING OF CONSTRUCTION JOINT SHALL NOT BE MORE THAN 1.20M.

| | | | | | | | | | | | | | |
|---|---|---|---|---|---|---|---|---|---|---|---|---|---|
| | SIGN. | | | | | | | | | | | | |
| | INITIALS | | | | | | | | | | | | |
| | REVISIONS | | | | | | | | | | | | |
| P0 | SIGN. | | | | | | | | | | | | |
| | INITIALS | SM | LD/AD | DVP | | | | | | | NMS | NMS | 15-04-2022 |
| | REVISIONS | | | | | | | | | | | | |
| ISSUE | | DRN | DSN | CHD | CV | EL | IC | ME | | | PE/PM | APPD | DATE (dd-mm-yyyy) |
| | | | | | CLEARED | | | | | | | | |

'P' (PRELIMINARY) ISSUES ARE NOT TO BE USED FOR CONSTRUCTION / FABRICATION BUT ARE ISSUED FOR LIMITED PURPOSES ONLY AS INDICATED IN THE SMALL BLOCK ABOVE THIS BLOCK.

CONSTRUCTION / FABRICATION WORK IS PERMITTED ON 'R' (RELEASED) ISSUES ONLY.

INFORMATION CONTAINED WITHIN 'HOLD' IS NOT RELEASED FOR CONSTUCTION / FABRICATION. FIELD MUST GET DESIGN OFFICE TO CLEAR 'HOLDS' IN TIME BEFORE PROCEEDING WITH ANY CONSTRUCTION/ FABRICATION WORK RELATED TO 'HOLDS'.

SIGN. OF CLIENT:-

| | | | |
|---|---|---|---|
| | | | |
| JE | AE | EE | SE |

PURPOSE : FOR TENDER ONLY

DO NOT SCALE

Proprietary Notice and Version Control This document contains confidential information for use only by the " Client " ; for the Project under consideration, which is provided for the sole purpose of permitting the recipient to evaluate the information submitted herewith. In consideration of receipt of this document; unless agreed to in contrary in the Contract; the recipient agrees to maintain such information in confidence and to not reproduce or otherwise disclose this information to any persons outside the recipient's organisation; except that there is no obligation to maintain the confidentiality of any information which was known to the recipient prior to receipt of such information from Tata Consulting Engineers Limited, or becomes publicly known through no fault of recipient, or Tata Consulting Engineers Limited, or is received without obligation of confidentiality from a third party owing no obligation of confidentiality to Tata Consulting Engineers Limited. All information given under this version over rides all and any kind of offers, assumptions, deliverables and contracts submitted verbally (and subsequently communicated in writing) or in writing or otherwise given under any and all previous version/s.

FILE NAME 12503A-CV-30583-Rev-P0

DETAILED DESIGN CONSULTANCY, HP-SHIVA (PACKAGE CS09)

IRRIGATION, HORTICULTURE, ORCHARDS AND VALUE CHAIN DEVELOPMENT

TYPICAL DETAIL OF SADDLE SUPPORT

TATA CONSULTING ENGINEERS LIMITED

MUMBAI

| | | | |
|---|---|---|---|
| SCALE : NTS | DWG NO. TCE.12503A-CV-3082-RC-30583 | ISSUE P0 | SIZE-A3 |
| DC & DISC : DEL-CV | | | |

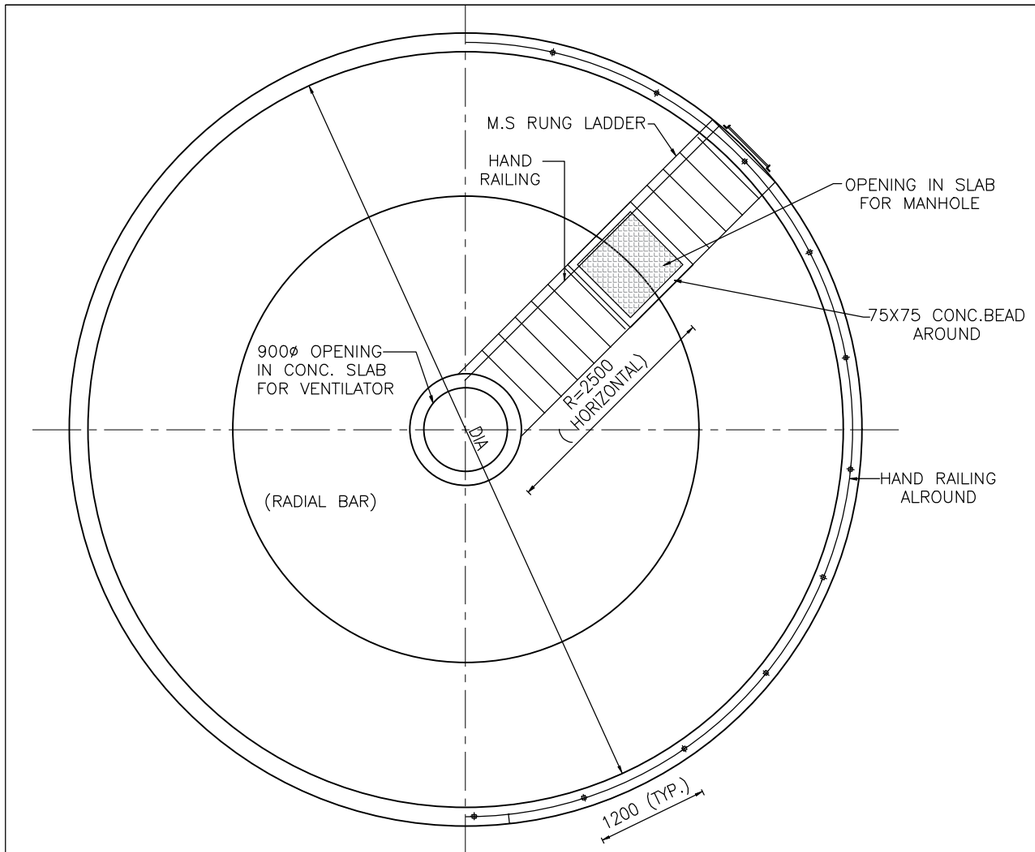


## PLAN

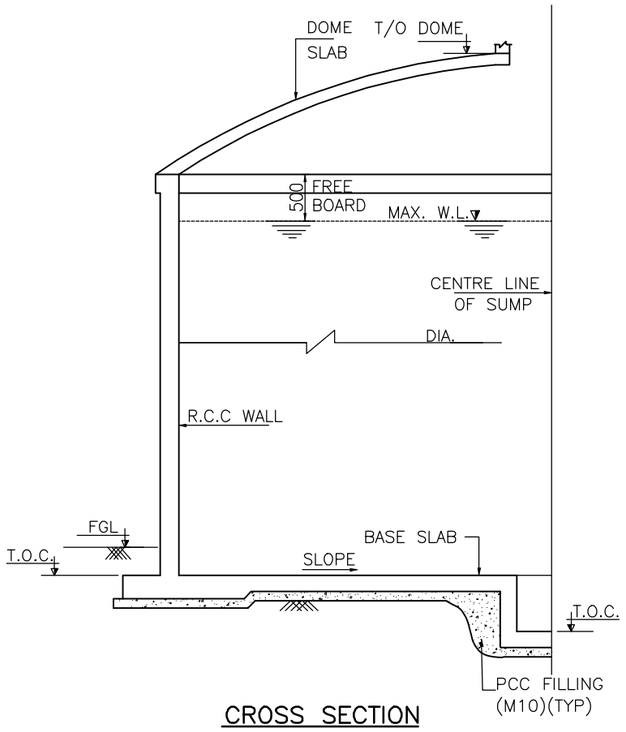


## CROSS SECTION

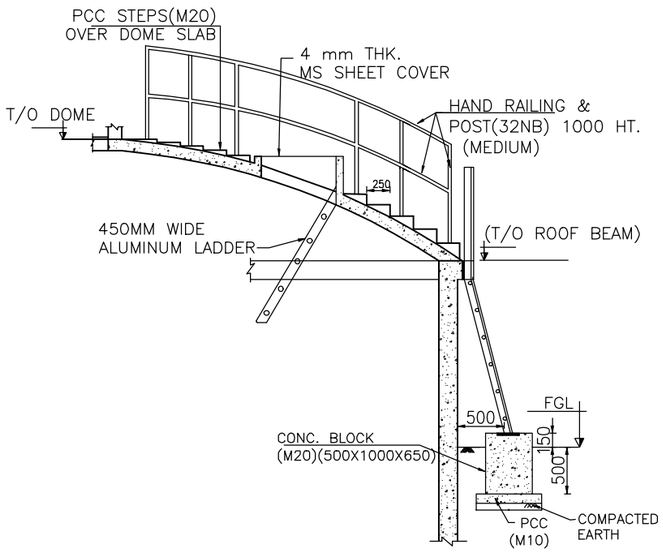


## DET.OF STEPS AND M.S.RUNG LADDER

## LEGEND

DIA — — — DIAMETER
R — — — RADIUS
PCC — — — PLAIN CEMENT CONCRETE
TYP — — — TYPICAL
WL — — — WATER LEVEL
M.S. — — — MILD STEEL
T/O — — — TOP OF

## NOTES

1. ALL DIMENSIONS ARE IN MILLIMETRES AND LEVELS IN METRES UNLESS NOTED.
2. DO NOT SCALE THE DRAWING. FOLLOW FIGURED DIMENSIONS ONLY.
3. GRADE OF CONCRETE SHALL BE M30 WITH MAXIMUM 20mm DOWNGRADED AGGREGATES CONFORMING TO IS 456.
4. STEEL FOR REINFORCEMENT SHALL BE HIGH YIELD STRENGTH DEFORMED BARS OF GRADE FE–500 CONFORMING TO IS:1786.
5. SAFE BEARING CAPACITY OF SOIL IS TAKEN AS 10T/Sq.m. AT FOUNDING LEVEL AND SAME IS TO BE CONFIRMED AT SITE BEFORE EXECUTION.
6. PLAIN CEMENT CONCRETE UNDER FOUNDATION SHALL BE OF GRADE M10 CONFORMING TO IS 456.
7. IF ANY LOOSE SOIL IS ENCOUNTERED AT FOUNDING LEVEL DURING CONSTRUCTION, IT SHOULD BE BROUGHT TO THE NOTICE OF THE ENGINEER.
8. IF GROUND WATER TABLE IS ENCOUNTERED DURING CONSTRUCTION, IT SHOULD BE BROUGHT TO THE NOTICE OF THE ENGINEER FOR MAKING APPROPRIATE CHANGES IN THE DESIGN.
9. THE SPACING OF CONSTRUCTION JOINT SHALL NOT BE MORE THAN 1.20M.

| | | | | | | | | | | | | | | |
|---|---|---|---|---|---|---|---|---|---|---|---|---|---|---|
| | SIGN. | | | | | | | | | | | | | |
| | INITIALS | | | | | | | | | | | | | |
| | REVISIONS | | | | | | | | | | | | | |
| PO | SIGN. | | | | | | | | | | | | | |
| | INITIALS | AN | AD | DVP | | | | | | | NMS | NMS | 15-04-2022 | |
| | REVISIONS | | | | | | | | | | | | | |
| ISSUE | | DRN | DSN | CHD | CV | EL | IC | ME | | | PE/PM | APPD | DATE (dd-mm-yyyy) | |
| | | | | | CLEARED | | | | | | | | | |

'P' (PRELIMINARY) ISSUES ARE NOT TO BE USED FOR CONSTRUCTION / FABRICATION BUT ARE ISSUED FOR LIMITED PURPOSES ONLY AS INDICATED IN THE SMALL BLOCK ABOVE THIS BLOCK.

CONSTRUCTION / FABRICATION WORK IS PERMITTED ON 'R' (RELEASED) ISSUES ONLY.

INFORMATION CONTAINED WITHIN 'HOLD' IS NOT RELEASED FOR CONSTUCTION / FABRICATION. FIELD MUST GET DESIGN OFFICE TO CLEAR 'HOLDS' IN TIME BEFORE PROCEEDING WITH ANY CONSTRUCTION/ FABRICATION WORK RELATED TO 'HOLDS'.

SIGN. OF CLIENT:–

| JE | AE | EE | SE |
|---|---|---|---|

**PURPOSE : FOR TENDER ONLY**

DO NOT SCALE

Proprietary Notice and Version Control This document contains confidential information for use only by the " Client " ; for the Project under consideration, which is provided for the sole purpose of permitting the recipient to evaluate the information submitted herewith. In consideration of receipt of this document; unless agreed to in contrary in the Contract; the recipient agrees to maintain such information in confidence and to not reproduce or otherwise disclose this information to any person outside the recipient's organisation; except that there is no obligation to maintain the confidentiality of any information which was known to the recipient prior to receipt of such information from Tata Consulting Engineers Limited, or becomes publicly known through no fault of recipient, or Tata Consulting Engineers Limited, or is received without obligation of confidentiality from a third party owing no obligation of confidentiality to Tata Consulting Engineers Limited. All information given under this version over rides all and any kind of offers, assumptions, deliverables and contracts submitted verbally (and subsequently communicated in writing) or in writing or otherwise given under any and all previous version/s.

FILE NAME 12503A–CV–30584–Rev–P0

DETAILED DESIGN CONSULTANCY, HP–SHIVA (PACKAGE CS09)

IRRIGATION, HORTICULTURE, ORCHARDS AND VALUE CHAIN DEVELOPMENT

TYPICAL GLSR DETAILS

(1,00,000,1,50,000, 2,00,000, 2,50,000 LITRE CAPACITY)

**TATA CONSULTING ENGINEERS LIMITED**

MUMBAI

| SCALE : NTS | DWG NO. TCE.12503A–CV–3082–GA–30584 | ISSUE P0 |
|---|---|---|
| DC & DISC: DEL–CV | | |

SIZE–A3

FILE NAME: F–093–Rev–R1.DWG

TCE FORM NO. 093 R1

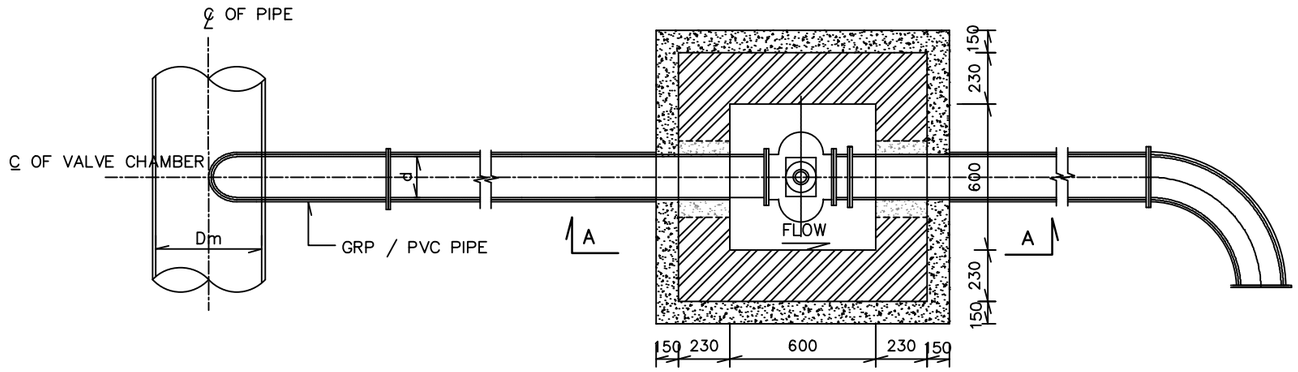


PLAN OF AIR VALVE CHAMBER

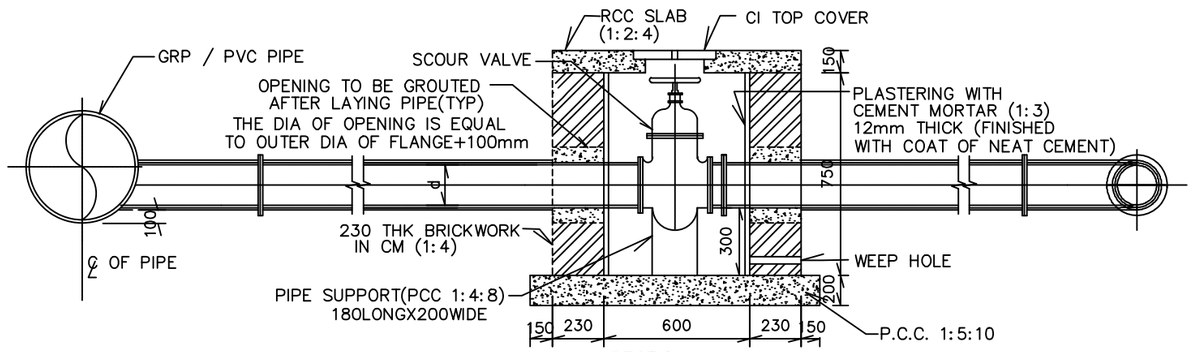


SECTION A–A

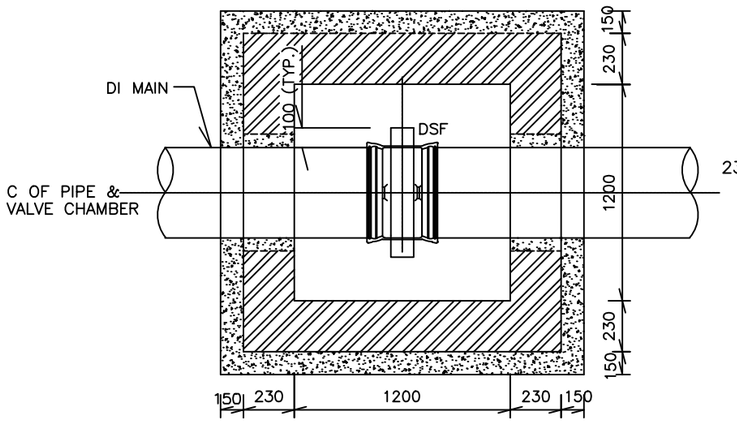


PLAN OF SCOUR VALVE CHAMBER

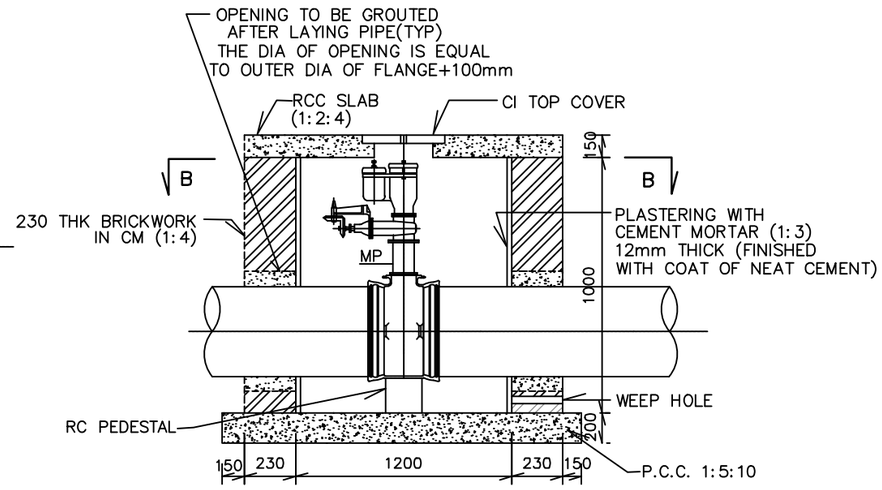


SECTION B–B

## LEGEND

| | | |
|---|---|---|
| RCC | ——— | REINFORCED CEMENT CONCRETE |
| PCC | ——— | PLAIN CEMENT CONCRETE |
| CI | ——— | CAST IRON |
| CM | ——— | CEMENT MORTAR |
| THK | ——— | THICK |
| PVC | ——— | POLY VINYL CHLORIDE |
| Dm/d | ——— | INTERNAL CLEAR DIAMETER OF PIPELINE |
| DI | ——— | DUCTILE IRON |
| DSF | ——— | DOUBLE SOCKET FLANGE |
| ℄ | ——— | CENTER LINE |
| MP | ——— | MAKEUP PIECE |

## NOTES

1. ALL DIMENSIONS ARE IN MM. & LEVELS ARE IN METRES.
2. GRADE OF REINFORCEMENT CEMENT CONCRETE SHALL 1:2:4
3. THE ACTUAL GLS AND ILS OF ALL CHAMBERS SHALL BE FIXED BY THE CONTRACTOR IN CONSULTATION WITH THE ENGINEER–IN–CHARGE.
4. EXACT ORIENTATION AND LOCATION OF THE CHAMBERS SHALL BE DECIDED BY THE CONTRACTOR IN CONSULTATION WITH THE ENGINEER–IN–CHARGE.
5. CEMENT SHALL BE ORDINARY PORTLAND TYPE CONFORMING TO IS:269 UN,
6. MAXIMUM SIZE OF AGGREGATES SHALL BE 20mm DOWNGRADED FOR RAFT, WALLS, BEAMS AND SLABS.
7. BACKFILLING AROUND WALLS TO BE DONE UNIFORMLY ALL ROUND IN SUCCESSIVE LIFTS OF EQUAL HEIGHT AS PER SPECIFICATION BACKFILLING SHALL BE DONE ONLY WHEN WHEN DIRECTED BY ENGINEER.
8. ALL CONCRETE WORK SHALL BE IN ACCORDANCE WITH TENDER SPECIFICATION.
9. CHAMBER TO BE PLASTERED INTERNALLY WITH CEMENT MORTAR 1:3 IN 12MM THICKNESS.
10. GRADE OF CONCRETE SHALL BE M20 WITH MAXIMUM 20mm DOWN GRADED AGGREGATES CONFORMING TO SPECIFICATION.
11. FOR LOCATION OF VALVE CHAMBERS REFER NETWORK DISTRIBUTION DRAWING. THE CONTRACTOR SHALL OBTAIN ENGINEER'S APPROVAL FOR ALL VALVE CHAMBER LOCATIONS AND LEVELS BEFORE EXECUTION.
12. THE ARRANGEMENT RELATED TO VALVE AND FITTINGS SHOWN IN THE DRAWING ARE INDICATIVE ONLY. BEFORE CONSTRUCTION, ARRANGEMENT OF VALVE & FITTINGS SHALL BE PROVIDED BY THE CONTRACTOR TO ENGINEER FOR APPROVAL.

| | | | | | | | | | | | | | | |
|---|---|---|---|---|---|---|---|---|---|---|---|---|---|---|
| | SIGN. | | | | | | | | | | | | | |
| | INITIALS | | | | | | | | | | | | | |
| | REVISIONS | | | | | | | | | | | | | |
| | SIGN. | | | | | | | | | | | | | |
| P0 | INITIALS | SM | MJ | DVP | | | | | | | NMS | NMS | | 15-04-2022 |
| | REVISIONS | | | | | | | | | | | | | |
| ISSUE | | DRN | DSN | CHD | CV | EL | IC | ME | | | PE/PM | APPD | DATE (dd-mm-yyyy) | |
| | | | | | CLEARED | | | | | | | | | |

'P' (PRELIMINARY) ISSUES ARE NOT TO BE USED FOR CONSTRUCTION / FABRICATION BUT ARE ISSUED FOR LIMITED PURPOSES ONLY AS INDICATED IN THE SMALL BLOCK ABOVE THIS BLOCK.

CONSTRUCTION / FABRICATION WORK IS PERMITTED ON 'R' (RELEASED) ISSUES ONLY.

INFORMATION CONTAINED WITHIN 'HOLD' IS NOT RELEASED FOR CONSTUCTION / FABRICATION. FIELD MUST GET DESIGN OFFICE TO CLEAR 'HOLDS' IN TIME BEFORE PROCEEDING WITH ANY CONSTRUCTION/ FABRICATION WORK RELATED TO 'HOLDS'.

SIGN. OF CLIENT:–

| JE | AE | EE | SE |
|---|---|---|---|
| | | | |

PURPOSE : FOR TENDER ONLY

DO NOT SCALE

Proprietary Notice and Version Control This document contains confidential information for use only by the "Client"; for the Project under consideration, which is provided for the sole purpose of permitting the recipient to evaluate the information submitted herewith. In consideration of receipt of this document; unless agreed to to contrary in the Contract; the recipient agrees to maintain such information in confidence and to not reproduce or otherwise disclose this information to any persons outside the recipient's organisation; except that there is no obligation to maintain the confidentiality of any information which was known to the recipient prior to receipt of such information from Tata Consulting Engineers Limited, or becomes publicly known through no fault of recipient, or Tata Consulting Engineers Limited, or is received without obligation of confidentiality from a third party owing no obligation of confidentiality to Tata Consulting Engineers Limited. All information given under this version over rides all and any kind of offers, assumptions, deliverables and contracts submitted verbally (and subsequently communicated in writing) or in writing or otherwise given under any and all previous version/s.

FILE NAME 12503A–CV–30585–Rev–P0

DETAILED DESIGN CONSULTANCY, HP–SHIVA (PACKAGE CS09)

IRRIGATION, HORTICULTURE, ORCHARDS AND VALUE CHAIN DEVELOPMENT

TYPICAL DETAILS OF SCOUR VALVE AND AIR VALVE CHAMBER

TATA CONSULTING ENGINEERS LIMITED

MUMBAI

| SCALE : NTS | DWG NO. TCE.12503A–CV–3082–WS–30585 | ISSUE P0 |
|---|---|---|
| DC & DISC: DEL–CV | | |

SIZE–A3

FILE NAME: F–093–Rev–R1.DWG

TCE FORM NO. 093 R1

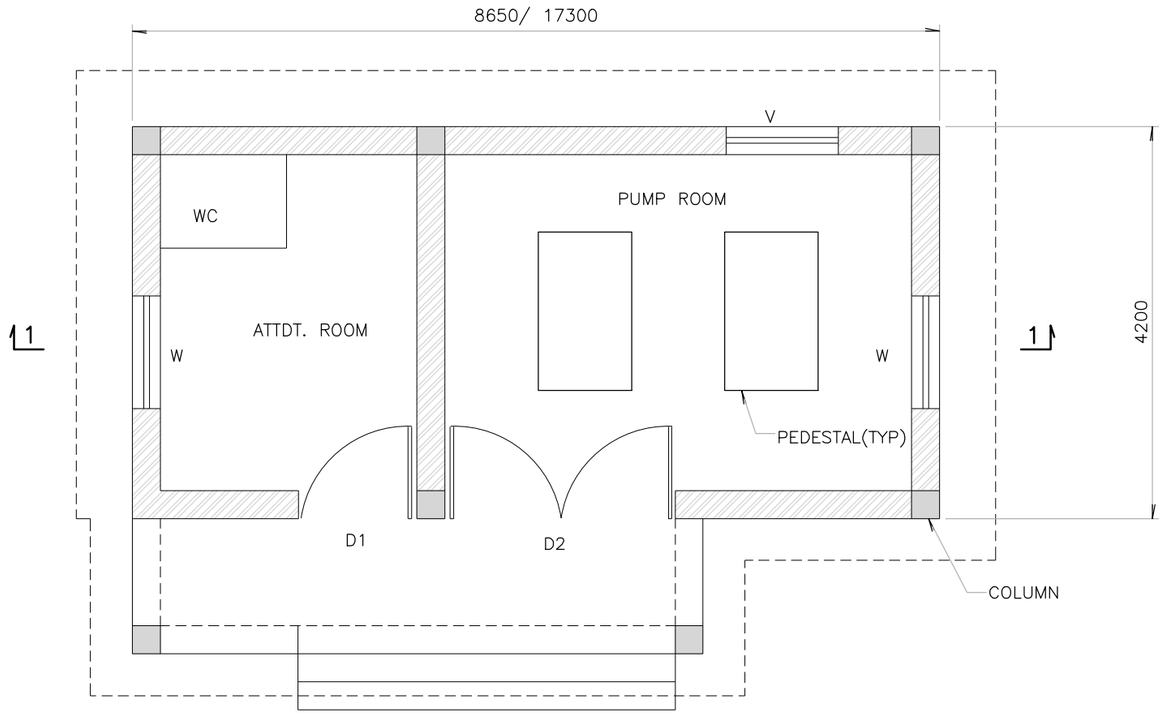


PLAN

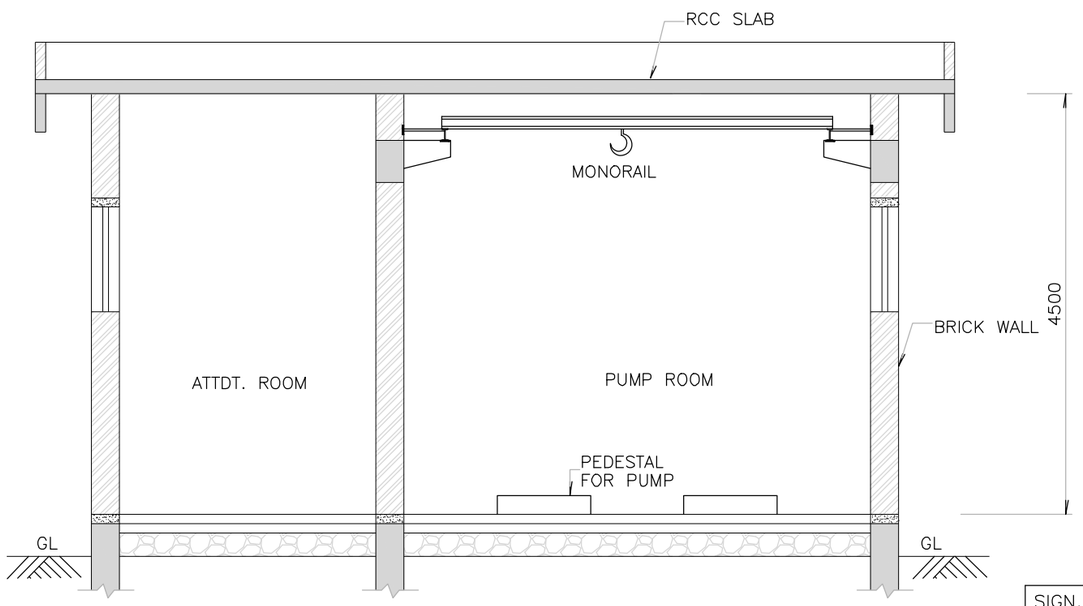


SECTION 1–1

## LEGEND

ATTDT. — — — ATTENDANT
RCC — — — REINFORCED CEMENT CONCRETE
TYP — — — TYPICAL
GL — — — GROUND LEVEL

## NOTES

1. ALL DIMENSIONS ARE IN MILLIMETRES AND LEVELS IN METRES UNLESS NOTED.
2. DO NOT SCALE THE DRAWING. FOLLOW FIGURED DIMENSIONS ONLY.
3. GRADE OF CONCRETE SHALL BE M20 WITH MAXIMUM 20mm DOWNGRADED AGGREGATES CONFORMING TO IS 456.
4. SAFE BEARING CAPACITY OF SOIL IS TAKEN AS 10T/Sq.m. AT FOUNDING LEVEL AND SAME IS TO BE CONFIRMED AT SITE BEFORE EXECUTION.
5. PLAIN CEMENT CONCRETE UNDER FOUNDATION SHALL BE OF GRADE M10 CONFORMING TO IS 456.
6. IF ANY LOOSE SOIL IS ENCOUNTERED AT FOUNDING LEVEL DURING CONSTRUCTION, IT SHOULD BE BROUGHT TO THE NOTICE OF THE ENGINEER.
7. IF GROUND WATER TABLE IS ENCOUNTERED DURING CONSTRUCTION, IT SHOULD BE BROUGHT TO THE NOTICE OF THE ENGINEER FOR MAKING APPROPRIATE CHANGES IN THE DESIGN.
8. THE SPACING OF CONSTRUCTION JOINT SHALL NOT BE MORE THAN 1.20M.

| | | | | | | | | | | | | | |
|---|---|---|---|---|---|---|---|---|---|---|---|---|---|
| P1 | SIGN. | | | | | | | | | | | | 08-06-2022 |
| | INITIALS | SM | AD | DVB | | | | | | | MK | DK | |
| | REVISIONS | | | | | | | | | | | | |
| P0 | SIGN. | | | | | | | | | | | | 15-04-2022 |
| | INITIALS | SM | LD/AD | DVB | | | | | | | MK | DK | |
| | REVISIONS | | | | | | | | | | | | |
| ISSUE | | DRN | DSN | CHD | CV | EL | IC | ME | | | PE/PM | APPD | DATE (dd-mm-yyyy) |
| | | | | | CLEARED | | | | | | | | |

'P' (PRELIMINARY) ISSUES ARE NOT TO BE USED FOR CONSTRUCTION / FABRICATION BUT ARE ISSUED FOR LIMITED PURPOSES ONLY AS INDICATED IN THE SMALL BLOCK ABOVE THIS BLOCK.

CONSTRUCTION / FABRICATION WORK IS PERMITTED ON 'R' (RELEASED) ISSUES ONLY.

INFORMATION CONTAINED WITHIN 'HOLD' IS NOT RELEASED FOR CONSTUCTION / FABRICATION. FIELD MUST GET DESIGN OFFICE TO CLEAR 'HOLDS' IN TIME BEFORE PROCEEDING WITH ANY CONSTRUCTION/ FABRICATION WORK RELATED TO 'HOLDS'.

SIGN. OF CLIENT:–

| | | | |
|---|---|---|---|
| | | | |
| JE | AE | EE | SE |

**PURPOSE : FOR TENDER ONLY**

DO NOT SCALE

Proprietary Notice and Version Control This document contains confidential information For use only by the "Client"; for the Project under consideration, which is provided for the sole purpose of permitting the recipient to evaluate the information submitted herewith. In consideration of receipt of this document; unless agreed to in contrary in the Contract; the recipient agrees to maintain such information in confidence and to not reproduce or otherwise disclose this information to any person outside the recipient's organisation; except that there is no obligation to maintain the confidentiality of any information which was known to the recipient prior to receipt of such information from Tata Consulting Engineers Limited, or becomes publicly known through no fault of recipient, or Tata Consulting Engineers Limited, or is received without obligation of confidentiality from a third party owing no obligation of confidentiality to Tata Consulting Engineers Limited. All information given under this version over rides all and any kind of offers, assumptions, deliverables and contracts submitted verbally (and subsequently communicated in writing) or in writing or otherwise given under any and all previous version/s.

FILE NAME 12503A–CV–30586–Rev–P1

DETAILED DESIGN CONSULTANCY, HP–SHIVA (PACKAGE CS09)

IRRIGATION, HORTICULTURE, ORCHARDS AND VALUE CHAIN DEVELOPMENT

TYPICAL DETAILS OF PUMP HOUSE

TATA CONSULTING ENGINEERS LIMITED

MUMBAI

| | | | |
|---|---|---|---|
| SCALE : NTS | DWG NO. TCE.12503A–CV–3082–GA–30586 | ISSUE P1 | SIZE–A3 |
| DC & DISC : DEL–CV | | | |

FILE NAME: F-093-Rev-R1.DWG

TCE FORM NO. 093 R1

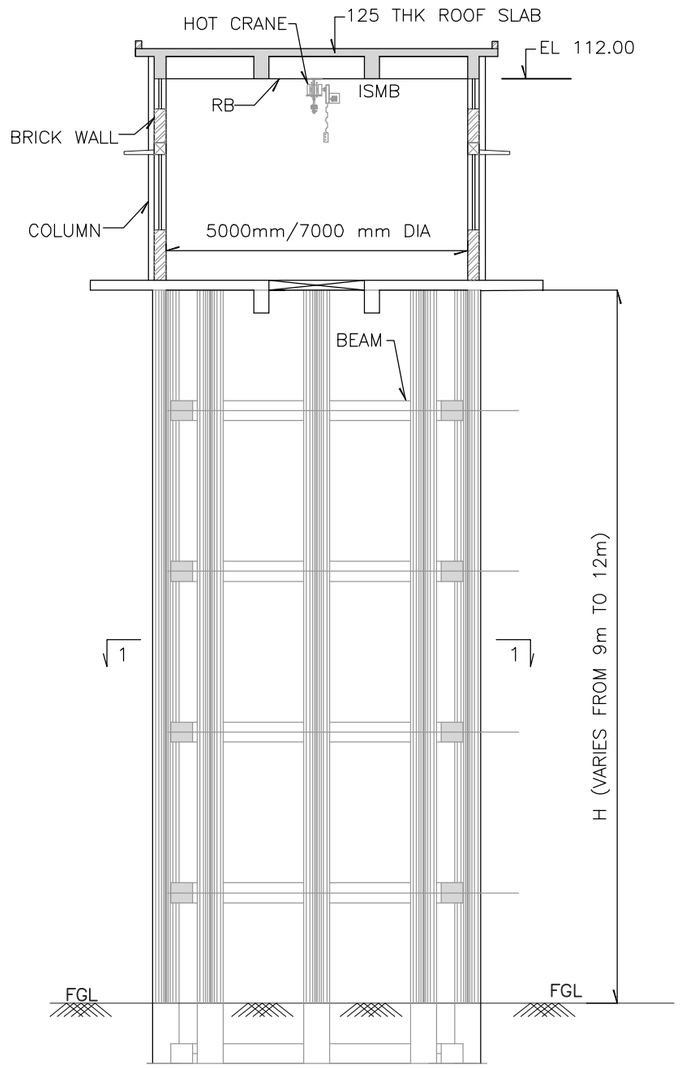


SECTION ELEVATION

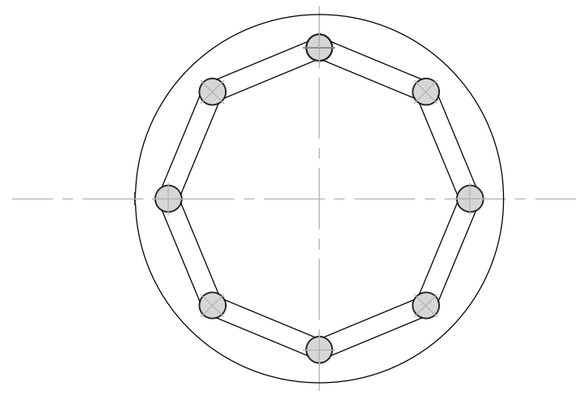

SECTIONAL PLAN
SEC 1–1

LEGEND:

DIA---- DIAMETER
H----- STAGE HEIGHT
THK---- THICKNESS
FGL-----FINISHED GROUND LEVEL
RB----- ROOF BEAM

NOTES:

1. ALL DIMENSIONS ARE IN MILLIMETRES AND LEVELS IN METRES UNLESS NOTED.
2. DO NOT SCALE THE DRAWING. FOLLOW FIGURED DIMENSIONS ONLY.
3. GRADE OF CONCRETE SHALL BE M30 WITH MAXIMUM 20mm DOWNGRADED AGGREGATES CONFORMING TO IS 456.
4. STEEL FOR REINFORCEMENT SHALL BE HIGH YIELD STRENGTH DEFORMED BARS OF GRADE FE–500 CONFORMING TO IS:1786.
5. SAFE BEARING CAPACITY OF SOIL IS TAKEN AS 10T/Sq.m. AT FOUNDING LEVEL AND SAME IS TO BE CONFIRMED AT SITE BEFORE EXECUTION.
6. PLAIN CEMENT CONCRETE UNDER FOUNDATION SHALL BE OF GRADE M10 CONFORMING TO IS 456.
7. IF ANY LOOSE SOIL IS ENCOUNTERED AT FOUNDING LEVEL DURING CONSTRUCTION, IT SHOULD BE BROUGHT TO THE NOTICE OF THE ENGINEER.
8. IF GROUND WATER TABLE IS ENCOUNTERED DURING CONSTRUCTION, IT SHOULD BE BROUGHT TO THE NOTICE OF THE ENGINEER FOR MAKING APPROPRIATE CHANGES IN THE DESIGN.
9. THE SPACING OF CONSTRUCTION JOINT SHALL NOT BE MORE THAN 1.20M.

| | | | | | | | | | | | | | |
|---|---|---|---|---|---|---|---|---|---|---|---|---|---|
| P1 | SIGN. | | | | | | | | | | | | 27-05-2022 |
| | INITIALS | SM | LD/AD | DVP | | | | | | | NMS | NMS | |
| | REVISIONS | AS PER CLIENT OBSERVATION | | | | | | | | | | | |
| P0 | SIGN. | | | | | | | | | | | | 15-04-2022 |
| | INITIALS | SM | LD/AD | DVP | | | | | | | NMS | NMS | |
| | REVISIONS | | | | | | | | | | | | |
| ISSUE | | DRN | DSN | CHD | CV | EL | IC | ME | | | PE/PM | APPD | DATE (dd-mm-yyyy) |
| | | | | | CLEARED | | | | | | | | |

'P' (PRELIMINARY) ISSUES ARE NOT TO BE USED FOR CONSTRUCTION / FABRICATION BUT ARE ISSUED FOR LIMITED PURPOSES ONLY AS INDICATED IN THE SMALL BLOCK ABOVE THIS BLOCK.

CONSTRUCTION / FABRICATION WORK IS PERMITTED ON 'R' (RELEASED) ISSUES ONLY.

INFORMATION CONTAINED WITHIN 'HOLD' IS NOT RELEASED FOR CONSTUCTION / FABRICATION. FIELD MUST GET DESIGN OFFICE TO CLEAR 'HOLDS' IN TIME BEFORE PROCEEDING WITH ANY CONSTRUCTION/ FABRICATION WORK RELATED TO 'HOLDS'.

SIGN. OF CLIENT:–

| JE | AE | EE | SE |
|---|---|---|---|
| | | | |

**PURPOSE : FOR TENDER ONLY**

DO NOT SCALE

Proprietary Notice and Version Control This document contains confidential information for use only by the " Client " ; for the Project under consideration, which is provided for the sole purpose of permitting the recipient to evaluate the information submitted herewith. In consideration of receipt of this document; unless agreed to in contrary in the Contract; the recipient agrees to maintain such information in confidence and to not reproduce or otherwise disclose this information to any person outside the recipient's organisation; except that there is no obligation to maintain the confidentiality of any information which was known to the recipient prior to receipt of such information from Tata Consulting Engineers Limited, or becomes publicly known through no fault of recipient, or Tata Consulting Engineers Limited, or is received without obligation of confidentiality from a third party owing no obligation of confidentiality to Tata Consulting Engineers Limited. All information given under this version over rides all and any kind of offers, assumptions, deliverables and contracts submitted verbally (and subsequently communicated in writing) or in writing or otherwise given under any and all previous version/s.

FILE NAME 12503A–CV–30587–Rev–P1

DETAILED DESIGN CONSULTANCY, HP–SHIVA (PACKAGE CS09)

IRRIGATION, HORTICULTURE, ORCHARDS AND VALUE CHAIN DEVELOPMENT

GENERAL ARRANGEMENT OF INTAKE WELL

TATA CONSULTING ENGINEERS LIMITED
MUMBAI

| SCALE : NTS | DWG NO. TCE.12503A–CV–3082–GA–30587 | ISSUE P1 |
|---|---|---|
| DC & DISC: DEL–CV | | |

SIZE–A3

FILE NAME: F–093–Rev–R1.DWG

TCE FORM NO. 093 R1

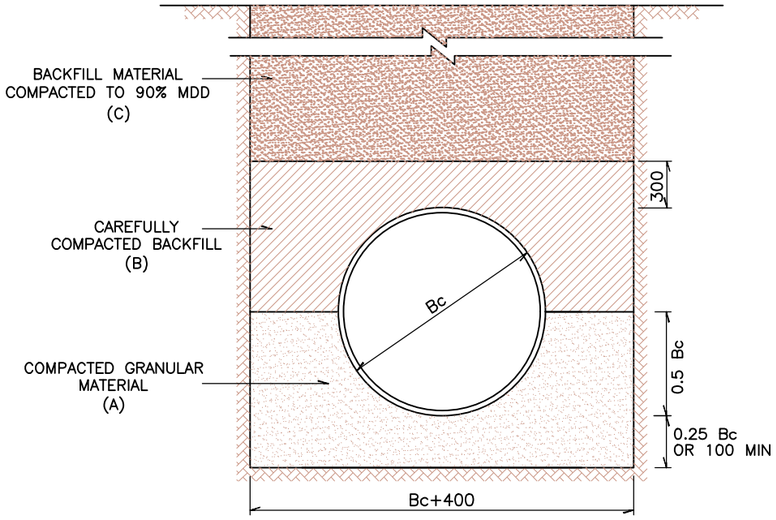


GRANULAR BEDDING (GRB)
CLASS–B

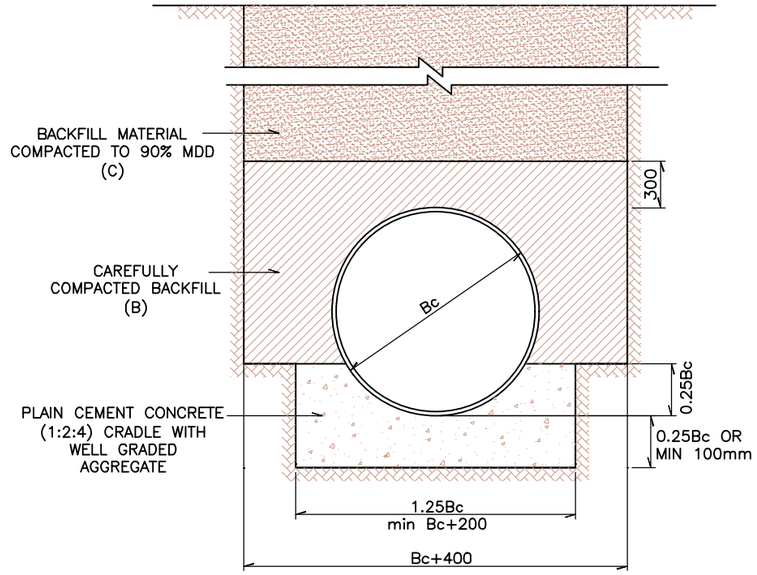


PLAIN CEMENT CONCRETE BEDDING (PCCB)
CLASS–Ab

## LEGEND:

| | |
|---|---|
| GL | GROUND LEVEL |
| C.M. | CEMENT MORTAR |
| TYP | TYPICAL |
| MAX | MAXIMUM |
| DIA | DIAMETER |
| THK | THICK |
| MS | MILD STEEL |
| Bc | OUTER DIAMETER OF PIPE |
| d | INTERNAL DIAMETER OF PIPE |

## NOTES:

1. ALL DIMENSIONS ARE IN MILLIMETERS UNLESS OTHERWISE INDICATED.
2. INTERNAL DIAMETER OF PIPE = D
3. OUTER DIAMETER OF PIPE = Bc.
4. BACKFILLING WITH APPROVED SELECTED EXCAVATED MATERIAL AND COMPACTION SHALL BE DONE BY HAND OR APPROVED MECHANICAL METHODS IN LAYERS OF 150mm WITH SPECIAL CARE TO AVOID DAMAGE OF THE PIPE
5. BACKFILLING SHALL BE DONE WITH EXCAVATED MATERIAL BY HAND OR APPROVED MECHANICAL METHODS IN LAYERS NOT EXCEEDING 150 MM THICKNESS AFTER COMPACTING, WETTED AND COMPACTED TO A DENSITY OF NOT LESS THAN 90% OF MAXIMUM DRY DENSITY AT OPTIMUM MOISTURE CONTENT OF THE SURROUNDING MATERIAL.
6. LAYER A. COMPACTED GRANULAR MATERIAL
7. LAYER B. CAREFULLY COMPACTED BACKFILL
8. LAYER C. BACKFILL MATERIAL COMPACTED TO 90% M.D.D

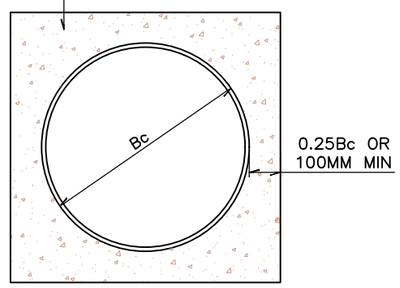


CONCRETE ENCASEMENT

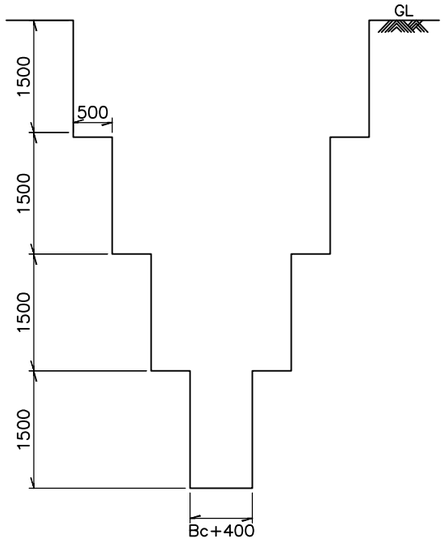


TYPICAL SECTION OF TRENCH

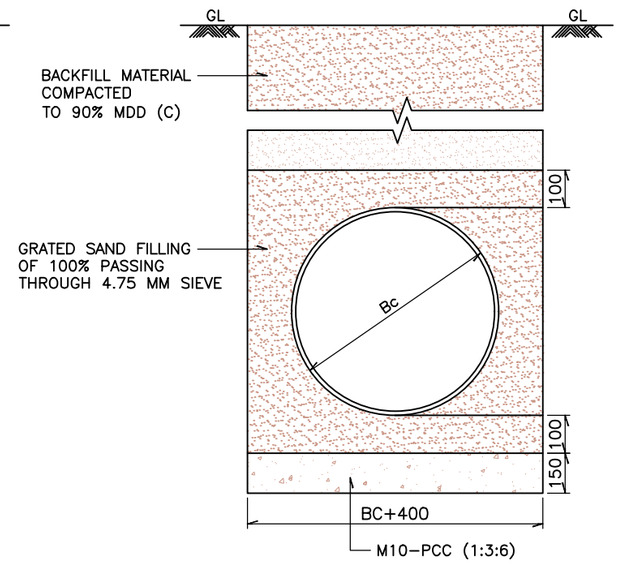


SAND BEDDING (SB) CLASS–S

DETAILED DESIGN CONSULTANCY, HP–SHIVA (PACKAGE CS09)

IRRIGATION, HORTICULTURE, ORCHARDS AND VALUE CHAIN DEVELOPMENT

TYPICAL DETAILS OF BEDDING AND TRENCH

SIGN. OF CLIENT:–

| JE | AE | EE | SE |
|---|---|---|---|
| | | | |

PURPOSE : FOR TENDER ONLY

DO NOT SCALE

Proprietary Notice and Version Control This document contains confidential information for use only by the " Client " ; for the Project under consideration, which is provided for the sole purpose of permitting the recipient to evaluate the information submitted herewith. In consideration of receipt of this document; unless agreed to in contrary in the Contract; the recipient agrees to maintain such information in confidence and to not reproduce or otherwise disclose this information to any person outside the recipient's organisation; except that there is no obligation to maintain the confidentiality of any information which was known to the recipient prior to receipt of such information from Tata Consulting Engineers Limited, or becomes publicly known through no fault of recipient, or Tata Consulting Engineers Limited, or is received without obligation of confidentiality from a third party owing no obligation of confidentiality to Tata Consulting Engineers Limited. All information given under this version over rides all and any kind of offers, assumptions, deliverables and contracts submitted verbally (and subsequently communicated in writing) or in writing or otherwise given under any and all previous version/s.

| ISSUE | | DRN | DSN | CHD | CV | EL | IC | ME | | | PE/PM | APPD | DATE (dd-mm-yyyy) |
|---|---|---|---|---|---|---|---|---|---|---|---|---|---|
| | SIGN. | | | | | | | | | | | | |
| | INITIALS | | | | | | | | | | | | |
| | REVISIONS | | | | | | | | | | | | |
| P0 | SIGN. | | | | | | | | | | | | |
| | INITIALS | SM | MJ | DVP | | | | | | | NMS | NMS | 15-04-2022 |
| | REVISIONS | | | | | | | | | | | | |
| | | | | | CLEARED | | | | | | | | |

'P' (PRELIMINARY) ISSUES ARE NOT TO BE USED FOR CONSTRUCTION / FABRICATION BUT ARE ISSUED FOR LIMITED PURPOSES ONLY AS INDICATED IN THE SMALL BLOCK ABOVE THIS BLOCK.

CONSTRUCTION / FABRICATION WORK IS PERMITTED ON 'R' (RELEASED) ISSUES ONLY.

INFORMATION CONTAINED WITHIN 'HOLD' IS NOT RELEASED FOR CONSTUCTION / FABRICATION. FIELD MUST GET DESIGN OFFICE TO CLEAR 'HOLDS' IN TIME BEFORE PROCEEDING WITH ANY CONSTRUCTION/ FABRICATION WORK RELATED TO 'HOLDS'.

FILE NAME 12503A–CV–30588–Rev–P0

TATA CONSULTING ENGINEERS LIMITED

MUMBAI

| SCALE : NTS | DWG NO. TCE.12503A–CV–3082–WS–30588 | ISSUE P0 |
|---|---|---|
| DC & DISC: DEL–CV | | |

SIZE–A3

FILE NAME: F–093–Rev–R1.DWG

TCE FORM NO. 093 R1

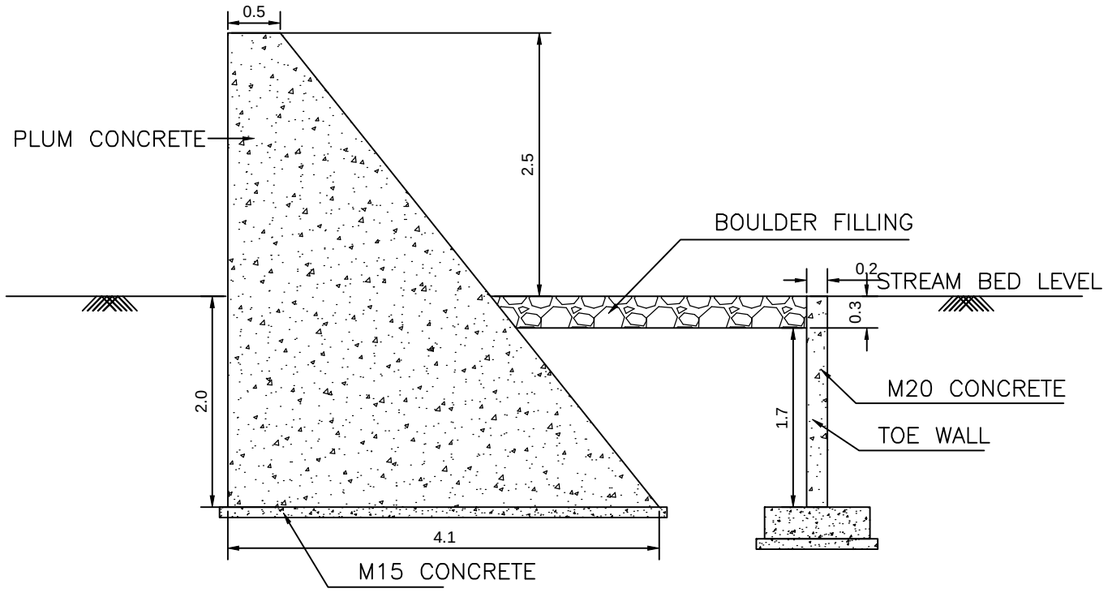


SECTION 1–1

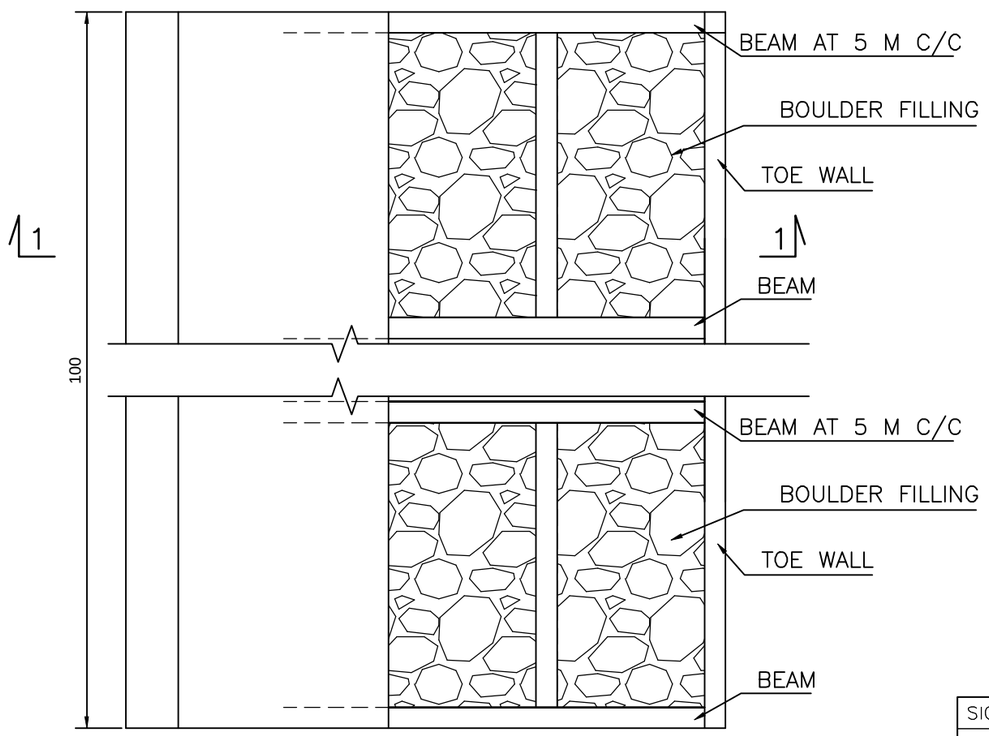


PLAN

## NOTES

1. ALL DIMENSIONS ARE IN METER.
2. THIS DRAWING HAS BEEN PREPARED IN ABSENCE OF DETAILED SURVEY AND GEOTECHNICAL INVESTIGATION WORKS. FOUNDATION IS ASSUMED AT 2M BELOW BED LEVEL

| | | | | | | | | | | | | | | |
|---|---|---|---|---|---|---|---|---|---|---|---|---|---|---|
| | SIGN. | | | | | | | | | | | | | |
| | INITIALS | | | | | | | | | | | | | |
| | REVISIONS | | | | | | | | | | | | | |
| | SIGN. | | | | | | | | | | | | | |
| P0 | INITIALS | SM | DVB | DVB | | | | | | | MK | MK | 18-04-2022 | |
| | REVISIONS | | | | | | | | | | | | | |
| ISSUE | | DRN | DSN | CHD | CV | EL | IC | ME | | | PE/PM | APPD | DATE (dd-mm-yyyy) | |
| | | | | | CLEARED | | | | | | | | | |

'P' (PRELIMINARY) ISSUES ARE NOT TO BE USED FOR CONSTRUCTION / FABRICATION BUT ARE ISSUED FOR LIMITED PURPOSES ONLY AS INDICATED IN THE SMALL BLOCK ABOVE THIS BLOCK.

CONSTRUCTION / FABRICATION WORK IS PERMITTED ON 'R' (RELEASED) ISSUES ONLY.

INFORMATION CONTAINED WITHIN 'HOLD' IS NOT RELEASED FOR CONSTUCTION / FABRICATION. FIELD MUST GET DESIGN OFFICE TO CLEAR 'HOLDS' IN TIME BEFORE PROCEEDING WITH ANY CONSTRUCTION/ FABRICATION WORK RELATED TO 'HOLDS'.

SIGN. OF CLIENT:–

| | | | |
|---|---|---|---|
| | | | |
| JE | AE | EE | SE |

PURPOSE : FOR TENDER ONLY

DO NOT SCALE

Proprietary Notice and Version Control This document contains confidential information for use only by the " Client " ; for the Project under consideration, which is provided for the sole purpose of permitting the recipient to evaluate the information submitted herewith. In consideration of receipt of this document; unless agreed to to contrary in the Contract; the recipient agrees to maintain such information in confidence and to not reproduce or otherwise disclose this information to any person outside the recipient's organization; except that there is no obligation to maintain the confidentiality of any information which was known to the recipient prior to receipt of such information from Tata Consulting Engineers Limited, or becomes publicly known through no fault of recipient, or Tata Consulting Engineers Limited, or is received without obligation of confidentiality from a third party owing no obligation of confidentiality to Tata Consulting Engineers Limited. All information given under this version over rides all and any kind of offers, assumptions, deliverables and contracts submitted verbally (and subsequently communicated in writing) or in writing or otherwise given under any and all previous version/s.

FILE NAME 12503A–CV–30589–Rev–P0

DETAILED DESIGN CONSULTANCY, HP–SHIVA (PACKAGE CS09)

IRRIGATION, HORTICULTURE, ORCHARDS AND VALUE CHAIN DEVELOPMENT

GENERAL ARRANGEMENT OF CHECK DAM

TATA CONSULTING ENGINEERS LIMITED

MUMBAI

| | | |
|---|---|---|
| SCALE : NTS | DWG NO. TCE.12503A–CV–3082–GA–30589 | ISSUE P0 |
| DC & DISC : DEL–CV | | |

SIZE-A3

FILE NAME: F-093-Rev-R1.DWG

TCE FORM NO. 093 R1

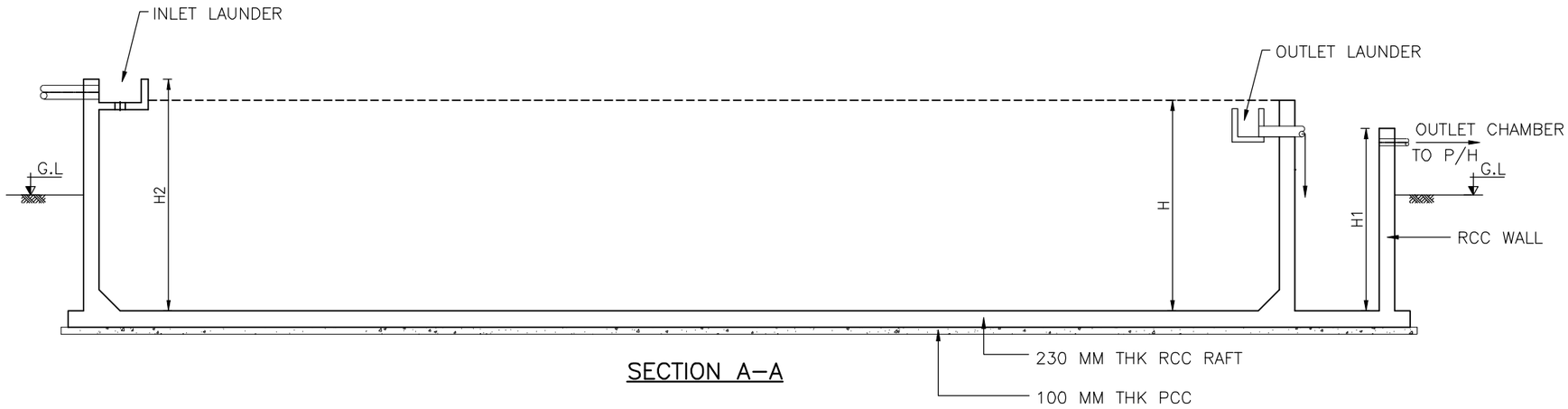


SECTION A–A

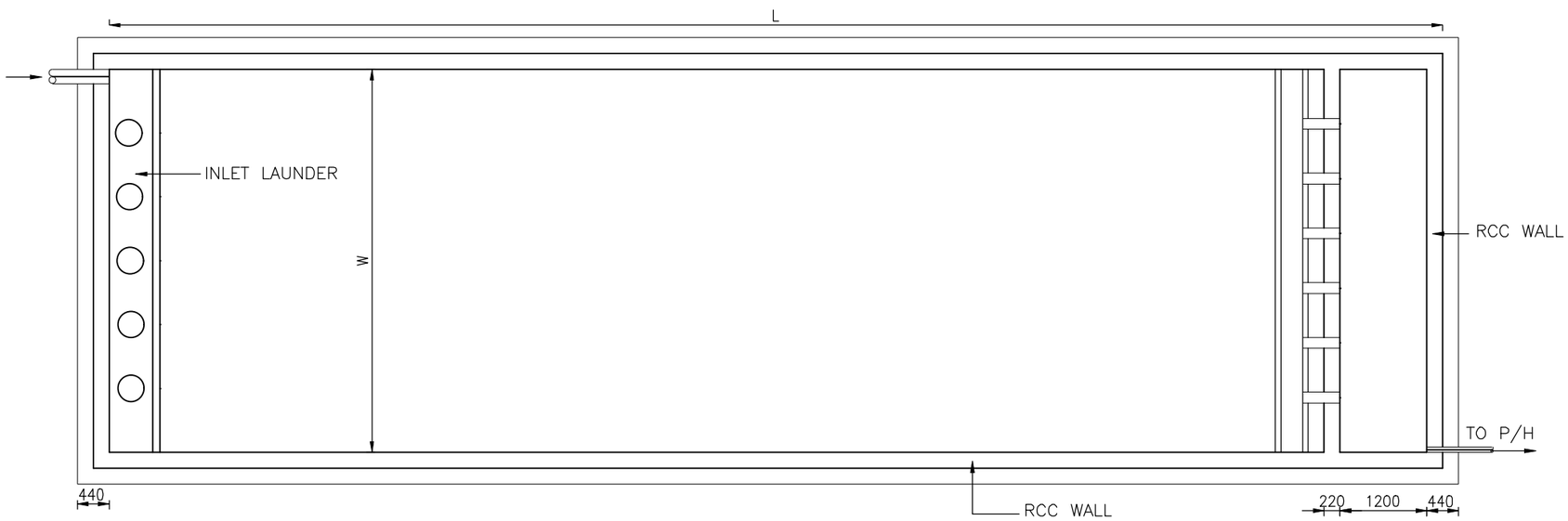


PLAN

## LEGEND

| | | |
|---|---|---|
| P/H | – – – | PUMP HOUSE |
| THK | – – – | THICK |
| PCC | – – – | PLAIN CEMENT CONCRETE |
| RCC | – – – | REINFORCED CEMENT CONCRETE |
| G.L. | – – – | GROUND LEVEL |
| L | – – – | LENGTH OF TANK |
| W | – – – | WIDTH OF TANK |
| H | – – – | HEIGHT OF TANK |

1. ALL DIMENSIONS ARE IN MILLIMETRES AND LEVELS IN METRES UNLESS NOTED.
2. DO NOT SCALE THE DRAWING. FOLLOW FIGURED DIMENSIONS ONLY.
3. GRADE OF CONCRETE SHALL BE M30 WITH MAXIMUM 20mm DOWNGRADED AGGREGATES CONFORMING TO IS 456.
4. STEEL FOR REINFORCEMENT SHALL BE HIGH YIELD STRENGTH DEFORMED BARS OF GRADE FE–500 CONFORMING TO IS:1786.
5. SAFE BEARING CAPACITY OF SOIL IS TAKEN AS 10T/Sq.m. AT FOUNDING LEVEL AND SAME IS TO BE CONFIRMED AT SITE BEFORE EXECUTION.
6. PLAIN CEMENT CONCRETE UNDER FOUNDATION SHALL BE OF GRADE M10 CONFORMING TO IS 456.
7. IF ANY LOOSE SOIL IS ENCOUNTERED AT FOUNDING LEVEL DURING CONSTRUCTION, IT SHOULD BE BROUGHT TO THE NOTICE OF THE ENGINEER.
8. IF GROUND WATER TABLE IS ENCOUNTERED DURING CONSTRUCTION, IT SHOULD BE BROUGHT TO THE NOTICE OF THE ENGINEER FOR MAKING APPROPRIATE CHANGES IN THE DESIGN.
9. THE SPACING OF CONSTRUCTION JOINT SHALL NOT BE MORE THAN 1.20M.

| ISSUE | | DRN | DSN | CHD | CV | EL | IC | ME | | | PE/PM | APPD | DATE (dd-mm-yyyy) |
|---|---|---|---|---|---|---|---|---|---|---|---|---|---|
| | SIGN. | | | | | | | | | | | | |
| | INITIALS | | | | | | | | | | | | |
| | REVISIONS | | | | | | | | | | | | |
| P0 | SIGN. | | | | | | | | | | | | |
| | INITIALS | AD | MJ | DVP | | | | | | | NMS | NMS | 15-04-2022 |
| | REVISIONS | | | | | | | | | | | | |
| | | | | | CLEARED | | | | | | | | |

'P' (PRELIMINARY) ISSUES ARE NOT TO BE USED FOR CONSTRUCTION / FABRICATION BUT ARE ISSUED FOR LIMITED PURPOSES ONLY AS INDICATED IN THE SMALL BLOCK ABOVE THIS BLOCK.

CONSTRUCTION / FABRICATION WORK IS PERMITTED ON 'R' (RELEASED) ISSUES ONLY.

INFORMATION CONTAINED WITHIN 'HOLD' IS NOT RELEASED FOR CONSTUCTION / FABRICATION. FIELD MUST GET DESIGN OFFICE TO CLEAR 'HOLDS' IN TIME BEFORE PROCEEDING WITH ANY CONSTRUCTION/ FABRICATION WORK RELATED TO 'HOLDS'.

SIGN. OF CLIENT:–

| JE | AE | EE | SE |
|---|---|---|---|
| | | | |

**PURPOSE : FOR TENDER ONLY**

DO NOT SCALE

Proprietary Notice and Version Control This document contains confidential information For use only by the "Client"; for the Project under consideration, which is provided for the sole purpose of permitting the recipient to evaluate the information submitted herewith. In consideration of receipt of this document; unless agreed to in contrary in the Contract; the recipient agrees to maintain such information in confidence and to not reproduce or otherwise disclose this information to any person outside the recipient's organisation; except that there is no obligation to maintain the confidentiality of any information which was known to the recipient prior to receipt of such information from Tata Consulting Engineers Limited, or becomes publicly known through no fault of recipient, or Tata Consulting Engineers Limited, or is received without obligation of confidentiality from a third party owing no obligation of confidentiality to Tata Consulting Engineers Limited. All information given under this version over rides all and any kind of offers, assumptions, deliverables and contracts submitted verbally (and subsequently communicated in writing) or in writing or otherwise given under any and all previous version/s.

FILE NAME 12503A–CV–30590–Rev–P0

DETAILED DESIGN CONSULTANCY, HP–SHIVA (PACKAGE CS09)

IRRIGATION, HORTICULTURE, ORCHARDS AND VALUE CHAIN DEVELOPMENT

TYPICAL DETAILS OF DESILTING TANK

TATA CONSULTING ENGINEERS LIMITED

MUMBAI

| SCALE | DWG NO. | ISSUE |
|---|---|---|
| : NTS | TCE.12503A–CV–3082–GA–30590 | P0 |
| DC & DISC : DEL–CV | | |

SIZE–A3

FILE NAME: F–093–Rev–R1.DWG

TCE FORM NO. 093 R1

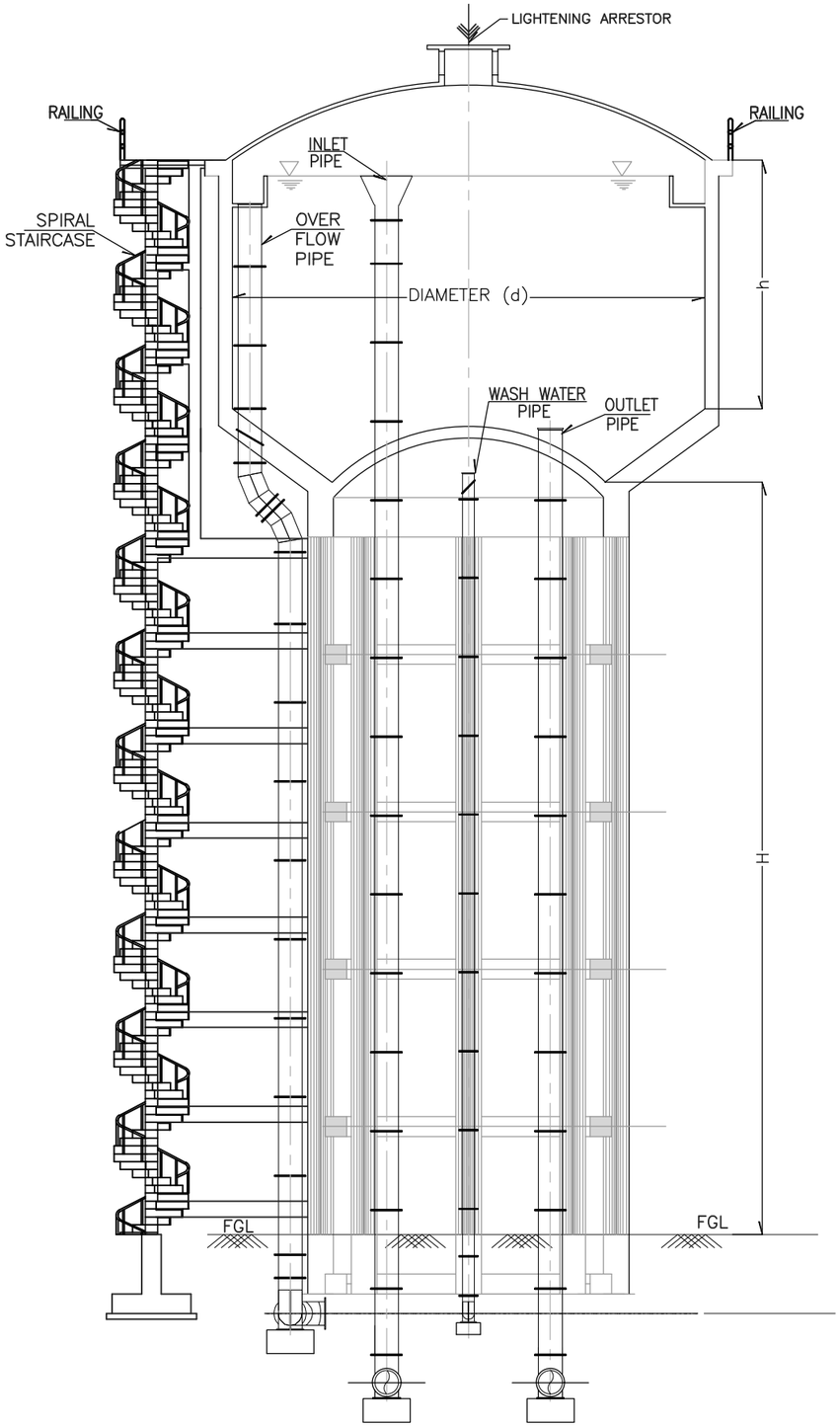


SECTION ELEVATION

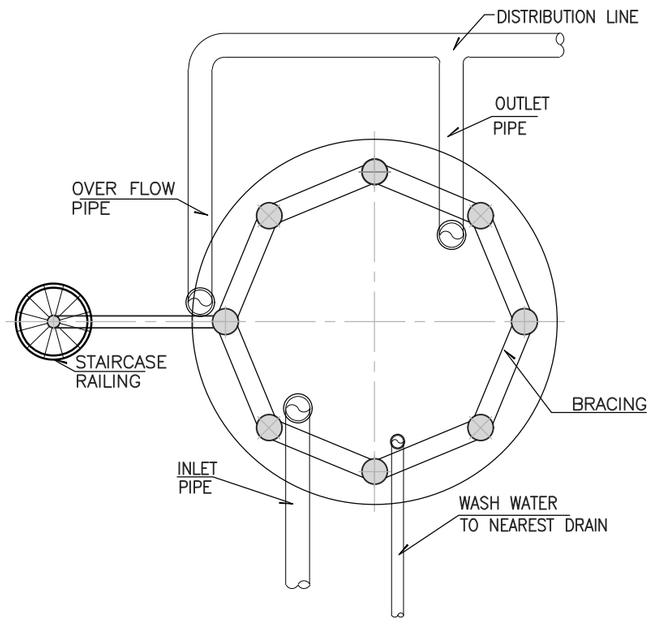


SECTIONAL PLAN

LEGEND:

D-----DIAMETER
H-----STAGE HEIGHT
h-----HEIGHT OF CYLINDRICAL WALL
FGL----FINISHED GROUND LEVEL

NOTES:

1. ALL DIMENSIONS ARE IN MILLIMETRES. ELEVATIONS ARE IN METRES UNLESS OTHERWISE NOTED.
2. ALL DIMENSIONS INDICATED ARE CLEAR INSIDE DIMENSIONS.

| | | | | | | | | | | | | | |
|---|---|---|---|---|---|---|---|---|---|---|---|---|---|
| | SIGN. | | | | | | | | | | | | |
| | INITIALS | | | | | | | | | | | | |
| | REVISIONS | | | | | | | | | | | | |
| PO | SIGN. | | | | | | | | | | | | |
| | INITIALS | SM | LD/AD | DVP | | | | | | | NMS | NMS | 15-04-2022 |
| | REVISIONS | | | | | | | | | | | | |
| ISSUE | | DRN | DSN | CHD | CV | EL | IC | ME | | | PE/PM | APPD | DATE (dd-mm-yyyy) |
| | | | | | CLEARED | | | | | | | | |

'P' (PRELIMINARY) ISSUES ARE NOT TO BE USED FOR CONSTRUCTION / FABRICATION BUT ARE ISSUED FOR LIMITED PURPOSES ONLY AS INDICATED IN THE SMALL BLOCK ABOVE THIS BLOCK.

CONSTRUCTION / FABRICATION WORK IS PERMITTED ON 'R' (RELEASED) ISSUES ONLY.

INFORMATION CONTAINED WITHIN 'HOLD' IS NOT RELEASED FOR CONSTUCTION / FABRICATION. FIELD MUST GET DESIGN OFFICE TO CLEAR 'HOLDS' IN TIME BEFORE PROCEEDING WITH ANY CONSTRUCTION/ FABRICATION WORK RELATED TO 'HOLDS'.

SIGN. OF CLIENT:-

| | | | |
|---|---|---|---|
| | | | |
| JE | AE | EE | SE |

PURPOSE : FOR TENDER ONLY

DO NOT SCALE

Proprietary Notice and Version Control This document contains confidential information for use only by the " Client " ; for the Project under consideration, which is provided for the sole purpose of permitting the recipient to evaluate the information submitted herewith. In consideration of receipt of this document; unless agreed to in contrary in the Contract; the recipient agrees to maintain such information in confidence and to not reproduce or otherwise disclose this information to any person outside the recipient's organisation; except that there is no obligation to maintain the confidentiality of any information which was known to the recipient prior to receipt of such information from Tata Consulting Engineers Limited, or becomes publicly known through no fault of recipient, or Tata Consulting Engineers Limited, or is received without obligation of confidentiality from a third party owing no obligation of confidentiality to Tata Consulting Engineers Limited. All information given under this version over rides all and any kind of offers, assumptions, deliverables and contracts submitted verbally (and subsequently communicated in writing) or in writing or otherwise given under any and all previous version/s.

FILE NAME 12503A-CV-30591-Rev-P0

DETAILED DESIGN CONSULTANCY, HP-SHIVA (PACKAGE CS09)

IRRIGATION, HORTICULTURE, ORCHARDS AND VALUE CHAIN DEVELOPMENT

TYPICAL DETAILS OF ELSR

TATA CONSULTING ENGINEERS LIMITED

MUMBAI

| | | | |
|---|---|---|---|
| SCALE : NTS | DWG NO. TCE.12503A-CV-3082-GA-30591 | | ISSUE P0 |
| DC & DISC : DEL-CV | | | |

SIZE-A3

FILE NAME: F-093-Rev-R1.DWG

TCE FORM NO. 093 R1

LEGEND:

CC-----CEMENT CONCRETE
RCC----REINFORCED CEMENT CONCRETE
LVL-----LEVEL
GL-----GROUND LEVEL

NOTES:

1. ALL DIMENSIONS AND ELEVATIONS ARE IN METRES UNLESS OTHERWISE NOTED.
2. ALL DIMENSIONS INDICATED ARE CLEAR INSIDE DIMENSIONS.

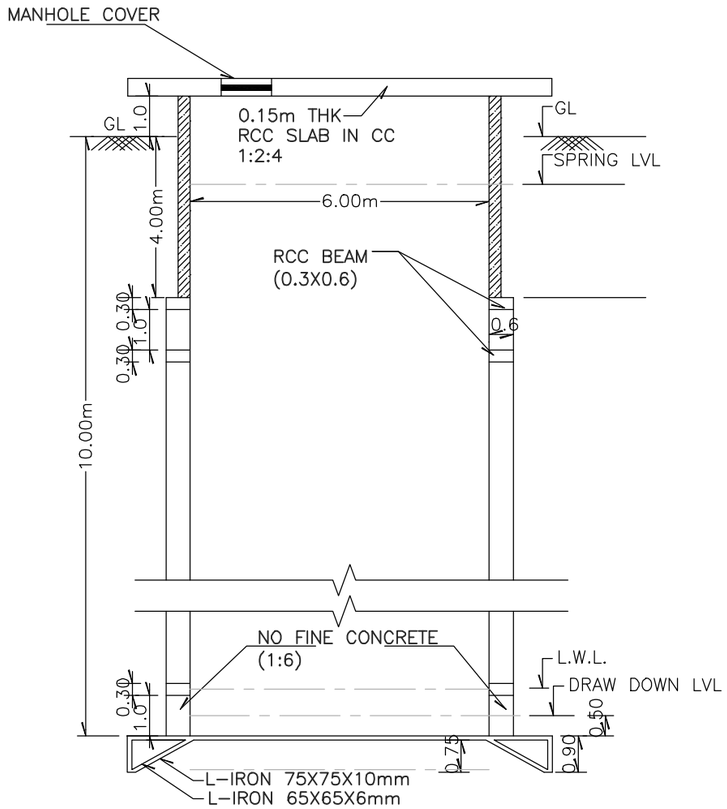


SECTION ELEVATION

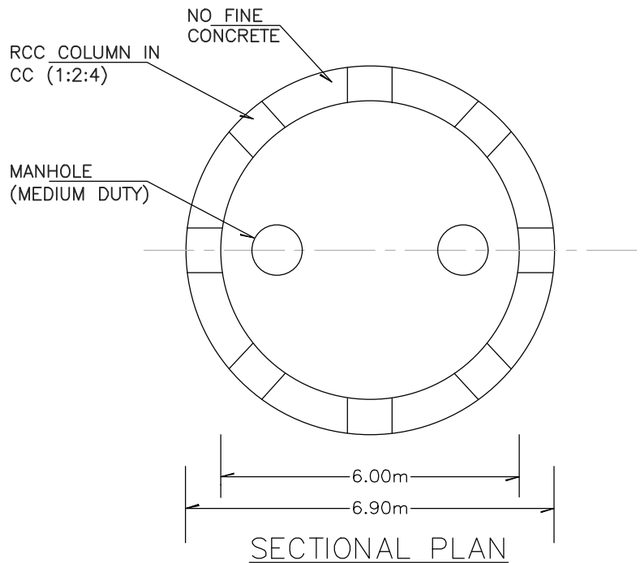


SECTIONAL PLAN

| | | | | | | | | | | | | | |
|---|---|---|---|---|---|---|---|---|---|---|---|---|---|
| | SIGN. | | | | | | | | | | | | |
| | INITIALS | | | | | | | | | | | | |
| | REVISIONS | | | | | | | | | | | | |
| P0 | SIGN. | | | | | | | | | | | | |
| | INITIALS | SM | SP | DVP | | | | | | | NMS | NMS | 27-05-2022 |
| | REVISIONS | | | | | | | | | | | | |
| ISSUE | | DRN | DSN | CHD | CV | EL | IC | ME | | | PE/PM | APPD | DATE (dd-mm-yyyy) |
| | | | | | CLEARED | | | | | | | | |

'P' (PRELIMINARY) ISSUES ARE NOT TO BE USED FOR CONSTRUCTION / FABRICATION BUT ARE ISSUED FOR LIMITED PURPOSES ONLY AS INDICATED IN THE SMALL BLOCK ABOVE THIS BLOCK.

CONSTRUCTION / FABRICATION WORK IS PERMITTED ON 'R' (RELEASED) ISSUES ONLY.

INFORMATION CONTAINED WITHIN 'HOLD' IS NOT RELEASED FOR CONSTUCTION / FABRICATION. FIELD MUST GET DESIGN OFFICE TO CLEAR 'HOLDS' IN TIME BEFORE PROCEEDING WITH ANY CONSTRUCTION/ FABRICATION WORK RELATED TO 'HOLDS'.

SIGN. OF CLIENT:-

| | | | |
|---|---|---|---|
| | | | |
| JE | AE | EE | SE |

PURPOSE : FOR TENDER ONLY

DO NOT SCALE

Proprietary Notice and Version Control This document contains confidential information for use only by the "Client"; for the Project under consideration, which is provided for the sole purpose of permitting the recipient to evaluate the information submitted herewith. In consideration of receipt of this document; unless agreed to in contrary in the Contract; the recipient agrees to maintain such information in confidence and to not reproduce or otherwise disclose this information to any person outside the recipient's organisation; except that there is no obligation to maintain the confidentiality of any information which was known to the recipient prior to receipt of such information from Tata Consulting Engineers Limited, or becomes publicly known through no fault of recipient, or Tata Consulting Engineers Limited, or is received without obligation of confidentiality from a third party owing no obligation of confidentiality to Tata Consulting Engineers Limited. All information given under this version over rides all and any kind of offers, assumptions, deliverables and contracts submitted verbally (and subsequently communicated in writing) or in writing or otherwise given under any and all previous version/s.

FILE NAME 12503A-CV-30592-Rev-P0

DETAILED DESIGN CONSULTANCY, HP-SHIVA (PACKAGE CS09)

IRRIGATION, HORTICULTURE, ORCHARDS AND VALUE CHAIN DEVELOPMENT

TYPICAL DETAILS OF PERCOLATION WELL

TATA CONSULTING ENGINEERS LIMITED

MUMBAI

| | | | |
|---|---|---|---|
| SCALE : NTS | DWG NO. TCE.12503A-CV-3082-GA-30592 | | ISSUE P0 |
| DC & DISC: DEL-CV | | | |

SIZE-A3

FILE NAME: F-093-Rev-R1.DWG

TCE FORM NO. 093 R1

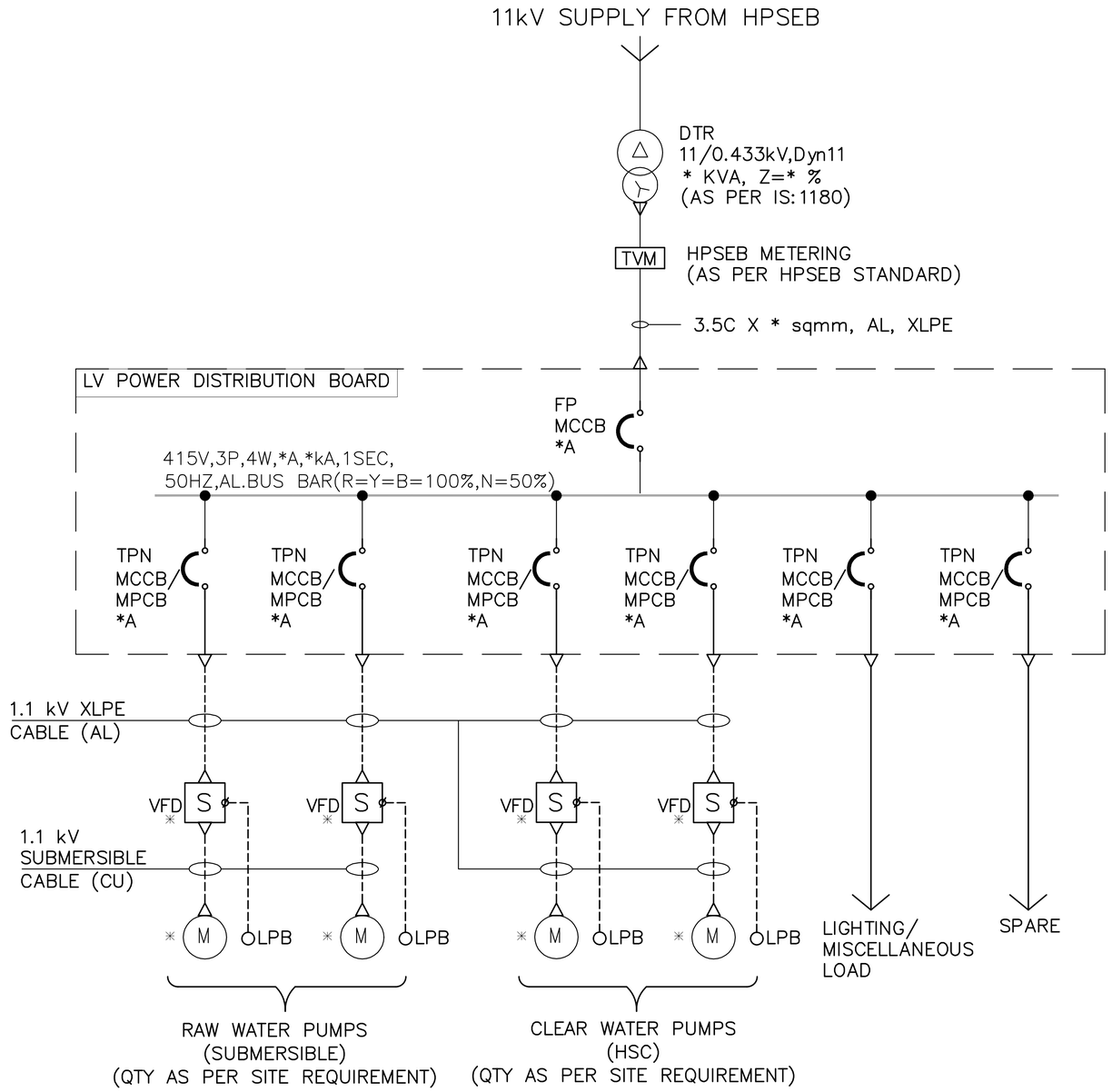


DETAILED DESIGN CONSULTANCY, HP-SHIVA (PACKAGE CS09)

IRRIGATION, HORTICULTURE, ORCHARDS AND VALUE CHAIN DEVELOPMENT

TYPICAL SLD FOR LIS PUMPING STATION WITH 1W+1S UNITS & LT METERING

SIGN. OF CLIENT:-

| JE | AE | EE | SE |
|---|---|---|---|
| | | | |

PURPOSE : FOR TENDER ONLY

DO NOT SCALE

| | | | | | | | | | | | | | | |
|---|---|---|---|---|---|---|---|---|---|---|---|---|---|---|
| | SIGN. | | | | | | | | | | | | | |
| | INITIALS | | | | | | | | | | | | | |
| | REVISIONS | | | | | | | | | | | | | |
| P0 | SIGN. | | | | | | | | | | | | | |
| | INITIALS | KKS | ASB | ASB | | | | | | | MK | DK | 18-04-2022 |
| | REVISIONS | | | | | | | | | | | | | |
| ISSUE | | DRN | DSN | CHD | CV | EL | IC | ME | | | PE/PM | APPD | DATE (dd-mm-yyyy) |
| | | | | | CLEARED | | | | | | | | |

'P' (PRELIMINARY) ISSUES ARE NOT TO BE USED FOR CONSTRUCTION / FABRICATION BUT ARE ISSUED FOR LIMITED PURPOSES ONLY AS INDICATED IN THE SMALL BLOCK ABOVE THIS BLOCK.

CONSTRUCTION / FABRICATION WORK IS PERMITTED ON 'R' (RELEASED) ISSUES ONLY.

INFORMATION CONTAINED WITHIN 'HOLD' IS NOT RELEASED FOR CONSTUCTION / FABRICATION. FIELD MUST GET DESIGN OFFICE TO CLEAR 'HOLDS' IN TIME BEFORE PROCEEDING WITH ANY CONSTRUCTION/ FABRICATION WORK RELATED TO 'HOLDS'.

Proprietary Notice and Version Control This document contains confidential information for use only by the ' Client ' ; for the Project under consideration, which is provided for the sole purpose of permitting the recipient to evaluate the information submitted herewith. In consideration of receipt of this document; unless agreed to in contrary in the Contract; the recipient agrees to maintain such information in confidence and to not reproduce or otherwise disclose this information to any person outside the recipient's organisation; except that there is no obligation to maintain the confidentiality of any information which was known to the recipient prior to receipt of such information from Tata Consulting Engineers Limited, or becomes publicly known through no fault of recipient, or Tata Consulting Engineers Limited, or is received without obligation of confidentiality, from a third party owing no obligation of confidentiality to Tata Consulting Engineers Limited. All information given under this version over rides all and any kind of offers, assumptions, deliverables and contracts submitted verbally (and subsequently communicated in writing) or in writing or otherwise given under any and all previous version/s.

TATA CONSULTING ENGINEERS LIMITED

MUMBAI

SCALE : NTS

DC & DISC: DEL-CV

DWG NO. TCE.12503A-EL-4002-AU-40001

ISSUE P0

SIZE-A3

FILE NAME: 12503A-EL-40001-Rev-P0

FILE NAME: F-093-Rev-R1.DWG

TCE FORM NO. 093 R1

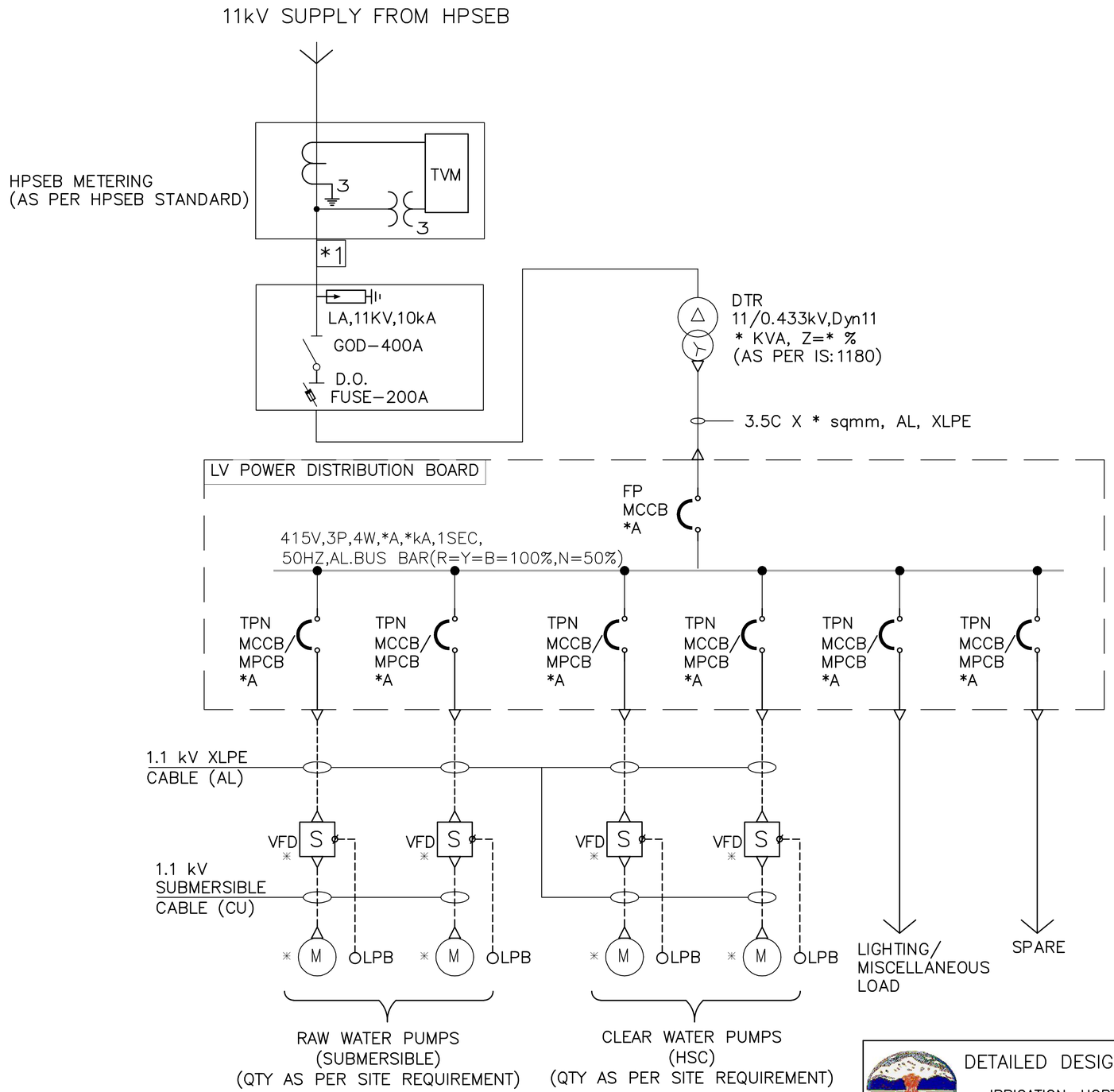


DETAILED DESIGN CONSULTANCY, HP-SHIVA (PACKAGE CS09)

IRRIGATION, HORTICULTURE, ORCHARDS AND VALUE CHAIN DEVELOPMENT

TYPICAL SLD FOR LIS PUMPING STATION WITH 1W+1S UNITS & HT METERING

SIGN. OF CLIENT:-

| JE | AE | EE | SE |
|---|---|---|---|
| | | | |

| ISSUE | | DRN | DSN | CHD | CV | EL | IC | ME | | | PE/PM | APPD | DATE (dd-mm-yyyy) |
|---|---|---|---|---|---|---|---|---|---|---|---|---|---|
| | SIGN. | | | | | | | | | | | | |
| | INITIALS | | | | | | | | | | | | |
| | REVISIONS | | | | | | | | | | | | |
| P0 | SIGN. | | | | | | | | | | | | |
| | INITIALS | KKS | ASB | ASB | | | | | | | MK | DK | 18-04-2022 |
| | REVISIONS | | | | | | | | | | | | |
| | | | | | CLEARED | | | | | | | | |

'P' (PRELIMINARY) ISSUES ARE NOT TO BE USED FOR CONSTRUCTION / FABRICATION BUT ARE ISSUED FOR LIMITED PURPOSES ONLY AS INDICATED IN THE SMALL BLOCK ABOVE THIS BLOCK.

CONSTRUCTION / FABRICATION WORK IS PERMITTED ON 'R' (RELEASED) ISSUES ONLY.

INFORMATION CONTAINED WITHIN 'HOLD' IS NOT RELEASED FOR CONSTUCTION / FABRICATION. FIELD MUST GET DESIGN OFFICE TO CLEAR 'HOLDS' IN TIME BEFORE PROCEEDING WITH ANY CONSTRUCTION/ FABRICATION WORK RELATED TO 'HOLDS'.

PURPOSE : FOR TENDER ONLY

DO NOT SCALE

Proprietary Notice and Version Control This document contains confidential information for use only by the " Client " ; for the Project under consideration, which is provided for the sole purpose of permitting the recipient to evaluate the information submitted herewith. In consideration of receipt of this document; unless agreed to in contrary in the Contract; the recipient agrees to maintain such information in confidence and to not reproduce or otherwise disclose this information to any person outside the recipient's organisation; except that there is no obligation to maintain the confidentiality of any information which was known to the recipient prior to receipt of such information from Tata Consulting Engineers Limited, or becomes publicly known through no fault of recipient, or Tata Consulting Engineers Limited, or is received without obligation of confidentiality from a third party owing no obligation of confidentiality to Tata Consulting Engineers Limited. All information given under this version over rides all and any kind of offers, assumptions, deliverables and contracts submitted verbally (and subsequently communicated in writing) or in writing or otherwise given under any and all previous version/s.

FILE NAME: 12503A-EL-40002-Rev-P0

TATA CONSULTING ENGINEERS LIMITED

MUMBAI

SCALE : NTS

DC & DISC: DEL-CV

DWG NO. TCE.12503A-EL-4002-AU-40002

ISSUE P0

SIZE-A3

FILE NAME: F-093-Rev-R1.DWG

TCE FORM NO. 093 R1

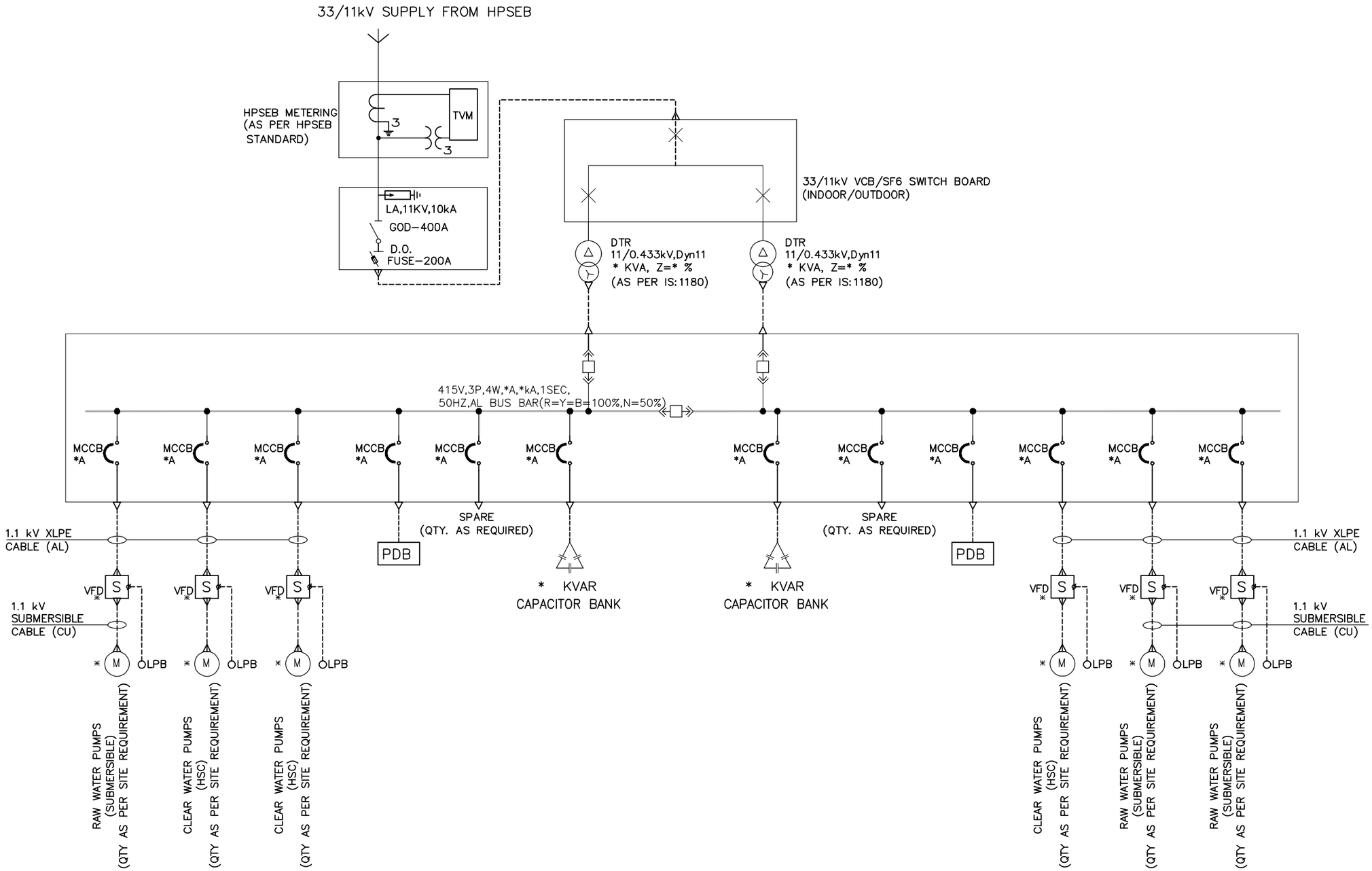


DETAILED DESIGN CONSULTANCY, HP-SHIVA (PACKAGE CS09)

IRRIGATION, HORTICULTURE, ORCHARDS AND VALUE CHAIN DEVELOPMENT

TYPICAL SLD FOR LIS PUMPING STATION WITH 2W+1S UNITS & HT METERING

SIGN. OF CLIENT:-

| JE | AE | EE | SE |
|---|---|---|---|
| | | | |

PURPOSE : FOR TENDER ONLY

DO NOT SCALE

| | | | | | | | | | | | | | | |
|---|---|---|---|---|---|---|---|---|---|---|---|---|---|---|
| | SIGN. | | | | | | | | | | | | | |
| | INITIALS | | | | | | | | | | | | | |
| | REVISIONS | | | | | | | | | | | | | |
| P0 | SIGN. | | | | | | | | | | | | | 18-04-2022 |
| | INITIALS | KKS | ASB | ASB | | | | | | | MK | DK | | |
| | REVISIONS | | | | | | | | | | | | | |
| ISSUE | | DRN | DSN | CHD | CV | EL | IC | ME | | | PE/PM | APPD | DATE (dd-mm-yyyy) | |
| | | | | | CLEARED | | | | | | | | | |

'P' (PRELIMINARY) ISSUES ARE NOT TO BE USED FOR CONSTRUCTION / FABRICATION BUT ARE ISSUED FOR LIMITED PURPOSES ONLY AS INDICATED IN THE SMALL BLOCK ABOVE THIS BLOCK.

CONSTRUCTION / FABRICATION WORK IS PERMITTED ON 'R' (RELEASED) ISSUES ONLY.

INFORMATION CONTAINED WITHIN 'HOLD' IS NOT RELEASED FOR CONSTUCTION / FABRICATION. FIELD MUST GET DESIGN OFFICE TO CLEAR 'HOLDS' IN TIME BEFORE PROCEEDING WITH ANY CONSTRUCTION/ FABRICATION WORK RELATED TO 'HOLDS'.

Proprietary Notice and Version Control This document contains confidential information for use only by the ' Client '; for the Project under consideration, which is provided for the sole purpose of permitting the recipient to evaluate the information submitted herewith. In consideration of receipt of this document; unless agreed to in contrary in the Contract; the recipient agrees to maintain such information in confidence and to not reproduce or otherwise disclose this information to any person outside the recipient's organization; except that there is no obligation to maintain the confidentiality of any information which was known to the recipient prior to receipt of such information from Tata Consulting Engineers Limited, or becomes publicly known through no fault of recipient, or Tata Consulting Engineers Limited, or is received without obligation of confidentiality from a third party owing no obligation of confidentiality to Tata Consulting Engineers Limited. All information given under this version over rides all and any kind of offers, assumptions, deliverables and contracts submitted verbally (and subsequently communicated in writing) or in writing or otherwise given under any and all previous version/s.

FILE NAME: 12503A-EL-40003-Rev-P0

TATA CONSULTING ENGINEERS LIMITED

MUMBAI

| SCALE : NTS | DWG NO. TCE.12503A-EL-4002-AU-40003 | ISSUE P0 |
|---|---|---|
| DC & DISC: DEL-CV | | |

SIZE-A3

FILE NAME: F-093-Rev-R1.DWG

TCE FORM NO. 093 R1

## GENERAL NOTES:

1. THIS SLD SHOWS THE SCHEME FOR DISTRIBUTION OF THE POWER WITHIN THE PROJECT BATTERY LIMIT & SHALL be READ IN CONJUNCTION WITH ALL OTHER RELEVANT DRGS. RATINGS, SIZES & QUANTITIES OF EQUIPMENTS MARKED AS '*' NEED TO BE CALCULATED / PROVIDED BASED ON SYSTEM REQUIREMENT AS TENDER SPECIFICATIONS. CONTRACTOR SHALL SUBMIT THE EQUIPMENT SIZING CALCULATIONS & CORRESPONDING SWITCH GEAR RATING ALONG WITH THE BID.

2. THE CONTRACTOR HAS TO DO DETAIL ENGINEERING OF HV & LV SYSTEM AND WORK OUT THE RATING OF EACH COMPONENT AS PER DESIGN CRITERIA GIVEN IN TENDER & EQUIPMENT SIZING CALCULATIONS AS APPROVED BY ENGINEER–IN –CHARGE.

3. HV SYSTEM:
a) INTER TRIPPING & CLOSING INTERLOCK SHALL BE PROVIDED BETWEEN TRANSFORMER FEEDER (11KV) AND LT PANEL INCOMER (0.415KV) SIDE.
b) CT /PT UNIT FOR HT METERING AND TVM SHALL BE AS PER DISCOM.

4. LV SYSTEM:
a) ACB
– 415V SWITCHBOARD INCOMER/ BUS COUPLER ACB SHALL BE FP, EDO TYPE WITH MICROPROCESSOR–BASED O/C, S/C & INBUILT E/F AND UV RELEASES.
– ALL OUTGOING ACBS SHALL BE TP, EDO TYPE WITH MICROPROCESSOR–BASED O/C, S/C & INBUILT E/F RELEASES EXCEPT FOR APFC WHICH SHALL BE MDO TYPE WITH THERMAL MAGNETIC RELEASES.
– IN ALL LT SWITCHBOARDS, CURRENT RATING ABOVE 630A SHALL HAVE ACBs.
– –ALL ACBS SHALL BE WITH ICS=ICU=ICW=100%.
b) MCCB
– 415V SWITCHBOARD INCOMER/ BUSCOUPLER MCCB (>=250A) SHALL BE FP FIXED TYPE WITH MICROPROCESSOR BASED O/C, S/C & E/F RELEASES AND OUTGOING MCCB ( >=250A) SHALL BE TP FIXED TYPE WITH MICROPROCESSOR BASED O/C, S/C & E/F RELEASES EXCEPT FOR APFC AND WHICH SHALL HAVE TM BASED O/C, S/C & E/F RELEASES WITH EXTERNAL E/F MODULE. ALL INCOMER/ OUTGOING MCCB (<250A) SHALL HAVE TM BASED O/C, S/C & E/F RELEASES WITH EXTERNAL E/F MODULE.
– ALL MCCB SHALL BE WITH Ics=Icu=100%.

5. ALL INDICATIONS, SHUNT TRIP/CLOSING COILS OF HT/ LT BREAKERS (VCBS/ ACBS) WILL BE ON 30/110V DC CONTROL SUPPLY. SPRING CHARGING MOTORS OF ALL BREAKERS WILL BE ON 230V AC SUPPLY. IF, DC SUPPLY IS NOT AVAILABLE FROM EXTERNAL SOURCE, IT SHALL BE DERIVED FROM INBUILT DC POWER PACK SUITABLE FOR ACCEPTING 230V AC SUPPLY FROM EXTERNAL SOURCE.
6. IN MCC, ALL MOTOR STARTER COMPONENTS RATING SHALL BE SELECTED AS PER MANUFACTURER'S TYPE–2 CO–ORDINATION CHART. MOTOR STARTERS SHALL BE COMPLETE WITH SINGLE PHASING PREVENTER. AMMETERS IN MOTOR FEEDERS SHALL BE PROVIDED WITH SUPPRESSED SCALE UP TO 6 TIMES FULL LOAD CURRENT FOR INDICATING STARTING CURRENT. ALL MOTOR FEEDERS UP TO OR EQUAL TO 5.5 KW SHALL HAVE DIRECT CONNECTED AMMETERS IN Y PHASE & MOTORS GREATER THAN 5.5KW WILL BE PROVIDED WITH ONE CT & AMMETER.

7. THE ON, OFF AND TRIP POSITION OF MCCB/ MPCB SHALL BE CLEARLY INDICATED. ROTARY OPERATING HANDLE FOR MCCBs/ MPCBs WITH THE DOOR CLOSED INTERLOCK SHALL BE PROVIDED. ALL MCCB/ MPCB FEEDERS ON ALL PANELS SHALL BE PROVIDED WITH ON/OFF/TRIP INDICATING LAMPS THROUGH AUXILIARY CONTACTS. WHEREVER STARTER FEEDER PROVIDED WITH MPCB BUT WITHOUT OVERLOAD RELAY, MPCB SHALL HAVE INBUILT OVERLOAD PROTECTION FEATURE.

8. 110 OR 220V AC CONTROL SUPPLY FOR LT PCC/ MCC SHALL BE DERIVED FROM CONTROL TRANSFORMER(S) OF ADEQUATE RATING. INTERLOCKING BETWEEN TWO CONTROL SUPPLIES SHALL BE PROVIDED SUCH THAT ENERGIZED SECTION CATERS FOR THE NEED OF THE PCC/ MCC PANEL.

9. MCCB & MPCB TERMINALS SHALL BE SHROUDED AND SHALL BE DESIGNED TO RECEIVE CABLE LUGS FOR RELEVANT CABLE SIZES.

10. ALL INDICATING LAMPS SHALL BE MULTICHIP LED TYPE.

11. MULTIFUNCTION METER FOR MEASURING ALL POWER & ENERGY PARAMETERS SHALL HAVE AN ACCURACY CLASS OF 1.0 OR BETTER, WITH RS 485 COMM PORT.

12. ALL CONTACTORS / TIMERS SHALL BE DIN RAIL MOUNTED.

13. UNDER STEADY STATE CONDITIONS, VOLTAGE DROP IN VARIOUS SECTIONS OF ELECTRICAL SYSTEM SHALL BE LIMITED TO A) CABLES BETWEEN TRANSFORMER SECONDARY TO PMCC – 2 % AND B) CABLES BETWEEN PMCC TO MOTOR– 3%. UNDER MOTOR STARTING CONDITIONS, THE CORRESPONDING VOLTAGE DROP SHALL NOT AFFECT THE OPERATION OF THE MOTOR CONTROLS OR THE ABILITY OF THE MOTOR TO START AND RUN EFFECTIVELY AND IN ANY EVENT SHALL NOT EXCEED 15%. FAULT CLEARING TIME TO BE CONSIDERED WHILE SIZING OF CABLES SHALL BE AS A) PCC INCOMER – 1 SEC AND B) TRANSFORMER PRIMARY: 0.16 SEC.

14. UNLESS SPECIFIED, ALL SWITCHBOARDS SHALL BE FREE STANDING, COMPARTMENTALIZED, EXTENSIBLE ON BOTH SIDES WITH HEIGHT NOT EXCEEDING 2300MM. ENCLOSURE PROTECTION OF SWITCHBOARDS SHALL BE AS PER TENDER.

15. WHEREVER APPLICABLE, SEPARATE PANEL FOR HVAC, FIRE AND PLUMPING PUMP WILL BE PART OF RESPECTIVE BOQ.

16. WHEREVER APPLICABLE, PROVISION OF ONE–WAY NET METERING SHALL BE PROPOSED IN THE SLD FOR INTEGRATION OF THE SOLAR WITH THE DISTRIBUTION SYSTEM. THIS METHODOLOGY NEEDS TO BE VERIFIED WITH THE STATE ELECTRICITY BOARD AND THE SOLAR VENDORS. SOLAR POWER SUPPLY WILL NOT BE ON WHEN DG IS ON.

17. WHEN TWO DG'S ARE OPERATING IN PARALLEL THEN PROVISION OF NEUTRAL CONTRACTOR INTERLOCKING SHOULD BE SUCH THAT ONLY ONE DG WILL BE EARTHED.

18. MCB USED FOR STANDARD NETWORK SHALL HAVE 'C' CHARACTERISTIC CURVE.

19. EACH TYPE & RATING OF OUTGOING FEEDER SHALL HAVE 10% SPARE OR MINIMUM ONE NUMBER.

## LEGEND:

| | | | |
|---|---|---|---|
| | LIGHTNING ARRESTER | R | RELAYING |
| | ISOLATER WITH EARTH SWITCH | I | INSTRUMENTATION |
| | ISOLATER WITH D.O. FUSE | 25 | SYNCHRONIZING RELAY |
| | | 27/59 | UNDER/OVER VOLTAGE RELAY |
| | CIRCUIT BREAKER(ACB/VCB) DRAW–OUT TYPE | 81 | UNDERFREQUENCY RELAY |
| | | 50 | INST. O/C PROTECTION |
| | CIRCUIT BREAKER(ACB/VCB) NON DRAW–OUT TYPE | 50N | INST. E/F PROTECTION |
| | | 51 | IDMT. O/C PROTECTION |
| | MCCB | 95 | TRIP SUPERVISION RELAY |
| | MPCB | 49W | WINDING TEMP. HIGH INDICATOR WITH ALARM & TRIP CONTACTS |
| | MCB | 49O | OIL TEMP. HIGH INDICATOR WITH ALARM & TRIP CONTACTS |
| | CABLE GLAND | 63 X | PRESSURE RELIEF DEVICE |
| | INDICATING LAMP | 63 T | BUCHHOLZ RELAY |
| | PUSH BUTTON | OSR | OIL SURGE RELAY |
| | CURRENT TRANSFORMER (CT) (FIGURE INDICATES NO. OF CT's) | MOG | MAGNETIC OIL GAUGE |
| | | 86 | LOCK OUT RELAY |
| | POTENTIAL TRANSFORMER | SC | SPRING CHARGED |
| | | TCH | TRIP CIRCUIT HEALTHY |
| | TRANSFORMER | SP | SERVICE POSITION |
| | | TP | TEST POSITION |
| TVM | TRI VECTOR METER | | ELECTRICAL CABINET |
| | CHOKE | MFM | MULTIFUNCTION METER |
| AS | AMMETER SELECTOR SWITCH | | |
| A | ANALOG AMMETER | NET METER | NET ENERGY METER |
| VS | VOLTMETER SELECTOR SWITCH | | |
| V | ANALOG VOLTMETER | TNC | TRIP–NEUTRAL–CLOSE SWITCH (KEY OPERATED) |
| | PUSH BUTTON STATION | | |
| E.M.I. | ELECTRICAL– MECHANICAL INTERLOCK | ETPB | EMERGENCY TRIP PUSH BUTTON |
| R G A | TWO MOMENTARY CONTACT PB WITH THREE INDICATING LAMPS (R = RED, G = GREEN, A = AMBER) | | CONTACTOR |
| | | NC | NORMALLY CLOSED |
| L–R | LOCAL REMOTE SELECTOR SWITCH | NO | NORMALLY OPEN |

DETAILED DESIGN CONSULTANCY, HP–SHIVA (PACKAGE CS09)

IRRIGATION, HORTICULTURE, ORCHARDS AND VALUE CHAIN DEVELOPMENT

TYPICAL SLD FOR LIS PUMPING STATION WITH LT/HT METERING

GENERAL NOTES & LEGENDS

SIGN. OF CLIENT:–

| JE | AE | EE | SE |
|---|---|---|---|
| | | | |

| | | | | | | | | | | | | | |
|---|---|---|---|---|---|---|---|---|---|---|---|---|---|
| | SIGN. | | | | | | | | | | | | |
| | INITIALS | | | | | | | | | | | | |
| | REVISIONS | | | | | | | | | | | | |
| P0 | SIGN. | | | | | | | | | | | | |
| | INITIALS | KKS | ASB | ASB | | | | | | | MK | DK | 18–04–2022 |
| | REVISIONS | | | | | | | | | | | | |
| ISSUE | | DRN | DSN | CHD | CV | EL | IC | ME | | | PE/PM | APPD | DATE (dd–mm–yyyy) |
| | | | | | CLEARED | | | | | | | | |

'P' (PRELIMINARY) ISSUES ARE NOT TO BE USED FOR CONSTRUCTION / FABRICATION BUT ARE ISSUED FOR LIMITED PURPOSES ONLY AS INDICATED IN THE SMALL BLOCK ABOVE THIS BLOCK.

CONSTRUCTION / FABRICATION WORK IS PERMITTED ON 'R' (RELEASED) ISSUES ONLY.

INFORMATION CONTAINED WITHIN 'HOLD' IS NOT RELEASED FOR CONSTUCTION / FABRICATION. FIELD MUST GET DESIGN OFFICE TO CLEAR 'HOLDS' IN TIME BEFORE PROCEEDING WITH ANY CONSTRUCTION/ FABRICATION WORK RELATED TO 'HOLDS'.

PURPOSE : FOR TENDER ONLY

DO NOT SCALE

Proprietary Notice and Version Control This document contains confidential information for use only by the : Client " ; for the Project under consideration, which is provided for the sole purpose of permitting the recipient to evaluate the information submitted herewith. In consideration of receipt of this document; unless agreed to in contrary in the Contract; the recipient agrees to maintain such information in confidence and to not reproduce or otherwise disclose this information to any person outside the recipient's organisation; except that there is no obligation to maintain the confidentiality of any information which was known to the recipient prior to receipt of such information from Tata Consulting Engineers Limited, or becomes publicly known through no fault of recipient, or Tata Consulting Engineers Limited, or is received without obligation of confidentiality from a third party owing no obligation of confidentiality to Tata Consulting Engineers Limited. All information given under this version over rides all and any kind of offers, assumptions, deliverables and contracts submitted verbally (and subsequently communicated in writing) or in writing or otherwise given under any and all previous version/s.

FILE NAME: 12503A–EL–40004–Rev–P0

TATA CONSULTING ENGINEERS LIMITED

MUMBAI

| SCALE : NTS | DWG NO. TCE.12503A–EL–4002–AU–40004 | ISSUE P0 |
|---|---|---|
| DC & DISC : DEL–CV | | |

SIZE–A3

FILE NAME: F–093–Rev–R1.DWG

TCE FORM NO. 093 R1