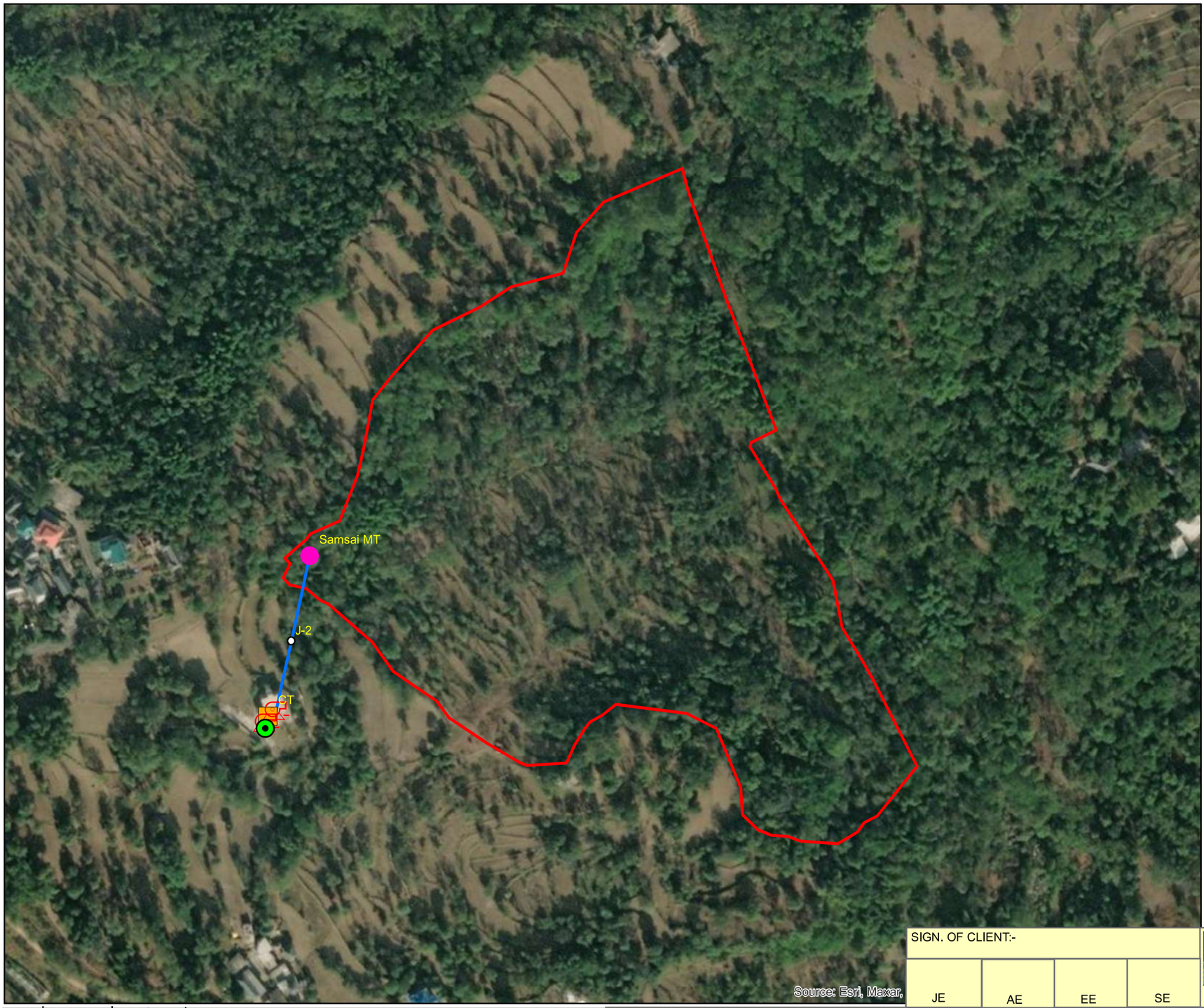

Legend

- Bore Well
- Pump
- Tank
- J-2
- Samsai MT
- Rising Main 80mm Dia GI Pipe
- Samsai

SIGN. OF CLIENT:-

JE	AE	EE	SE

DETAILED DESIGN CONSULTANCY, HP-SHIVA (PACKAGE CS09)

IRRIGATION, HORTICULTURE, ORCHARDS AND VALUE CHAIN DEVELOPMENT

	SIGN.								
	INITIALS								
	REVISIONS								
P0	SIGN.								
	INITIALS	GKJ	ES	DVB		MK	DK		15-06-2022
	REVISIONS								
ISSUE		DRN	DSN	CHD	CV / EL / IC / ME / CLEARED	PE/PM	APPD.		DATE

'P' (PRELIMINARY) ISSUES ARE NOT TO BE USED FOR CONSTRUCTION / FABRICATION BUT ARE ISSUED FOR LIMITED PURPOSES ONLY AS INDICATED IN THE SMALL BLOCK ABOVE THIS BLOCK.

CONSTRUCTION / FABRICATION WORK IS PERMITTED ON 'R' (RELEASED) ISSUES ONLY.

INFORMATION CONTAINED WITHIN 'HOLD' IS NOT RELEASED FOR CONSTUCTION / FABRICATION. FIELD MUST GET DESIGN OFFICE TO CLEAR 'HOLDS' IN TIME BEFORE PROCEEDING WITH ANY CONSTRUCTION/FABRICATION WORK RELATED TO 'HOLDS'.

PURPOSE: FOR TENDER ONLY

Proprietary Notice and Version Control This document contains confidential information for use only by the " Client " ; for the Project under consideration, which is provided for the sole purpose of permitting the recipient to evaluate the information submitted here with.In consideration of receipt of this document; unless agreed to in contrary in the Contract; the recipient agrees to maintain such information in confidence and to not reproduce or otherwise disclose this information to any person outside the recipient's organisation; except that there is no obligation to maintain the confidentiality of any information which was known to the recipient prior to receipt of such information from Tata Consulting Engineers Limited, or becomes publicly known through no fault of recipient, or Tata Consulting Engineers Limited, or is received without obligation of confidentiality from a third party owing no obligation of confidentiality to Tata Consulting Engineers Limited. All information given under this version over rides all and any kind of offers, assumptions, deliverables and contracts submitted verbally (and subsequently communicated in writing) or in writing or otherwise given under any and all previous version/s.

File Name: 12503A-CV-34213-Rev-P0

TITLE:- NETWORK DRAWING OF LIS SAMSAI FOR GHUMARWIN BLOCK, BILASPUR DISTRICT.

TATACONSULTING ENGINEERS LIMITED. MUMBAI

SCALE:- 1:2,500	DWG. No:-	ISSUE:-
DL.CEN.:- DEL-CV	TCE.12503A-CV-3082-WS-34213	P0

N
W E
S

Legend

- Percolation Well
- Pump
- MT
- Tank
- Junction
- Rising Main 80mm Dia GI Pipe
- Kothlu

	SIGN.								
	INITIALS								
	REVISIONS								
P0	SIGN.								
	INITIALS	GKJ	ES	DVB		MK	DK	15-06-2022	
	REVISIONS								

ISSUE		DRN	DSN	CHD	CV	EL	IC	ME			PE/PM	APPD.	DATE
					CLEARED								

'P' (PRELIMINARY) ISSUES ARE NOT TO BE USED FOR CONSTRUCTION / FABRICATION BUT ARE ISSUED FOR LIMITED PURPOSES ONLY AS INDICATED IN THE SMALL BLOCK ABOVE THIS BLOCK.

CONSTRUCTION / FABRICATION WORK IS PERMITTED ON 'R' (RELEASED) ISSUES ONLY.

INFORMATION CONTAINED WITHIN 'HOLD' IS NOT RELEASED FOR CONSTUCTION / FABRICATION. FIELD MUST GET DESIGN OFFICE TO CLEAR 'HOLDS' IN TIME BEFORE PROCEEDING WITH ANY CONSTRUCTION/FABRICATION WORK RELATED TO 'HOLDS'.

SIGN. OF CLIENT:-

JE	AE	EE	SE

PURPOSE: FOR TENDER ONLY

Proprietary Notice and Version Control This document contains confidential information for use only by the " Client " ; for the Project under consideration, which is provided for the sole purpose of permitting the recipient to evaluate the information submitted here with.In consideration of receipt of this document; unless agreed to in contrary in the Contract; the recipient agrees to maintain such information in confidence and to not reproduce or otherwise disclose this information to any person outside the recipient's organisation; except that there is no obligation to maintain the confidentiality of any information which was known to the recipient prior to receipt of such information from Tata Consulting Engineers Limited, or becomes publicly known through no fault of recipient, or Tata Consulting Engineers Limited, or is received without obligation of confidentiality from a third party owing no obligation of confidentiality to Tata Consulting Engineers Limited. All information given under this version over rides all and any kind of offers, assumptions, deliverables and contracts submitted verbally (and subsequently communicated in writing) or in writing or otherwise given under any and all previous version/s.

File Name: 12503A-CV-34214-Rev-P0

DETAILED DESIGN CONSULTANCY, HP-SHIVA (PACKAGE CS09)

IRRIGATION, HORTICULTURE, ORCHARDS AND VALUE CHAIN DEVELOPMENT

TITLE:-

NETWORK DRAWING OF LIS KOTHLU FOR SADAR-BILASPUR BLOCK, BILASPUR DISTRICT.

TATACONSULTING ENGINEERS LIMITED.
MUMBAI

SCALE:- 1:4,000

DL.CEN.:- DEL-CV

DWG. No:- TCE.12503A-CV-3082-WS-34214

ISSUE:- P0

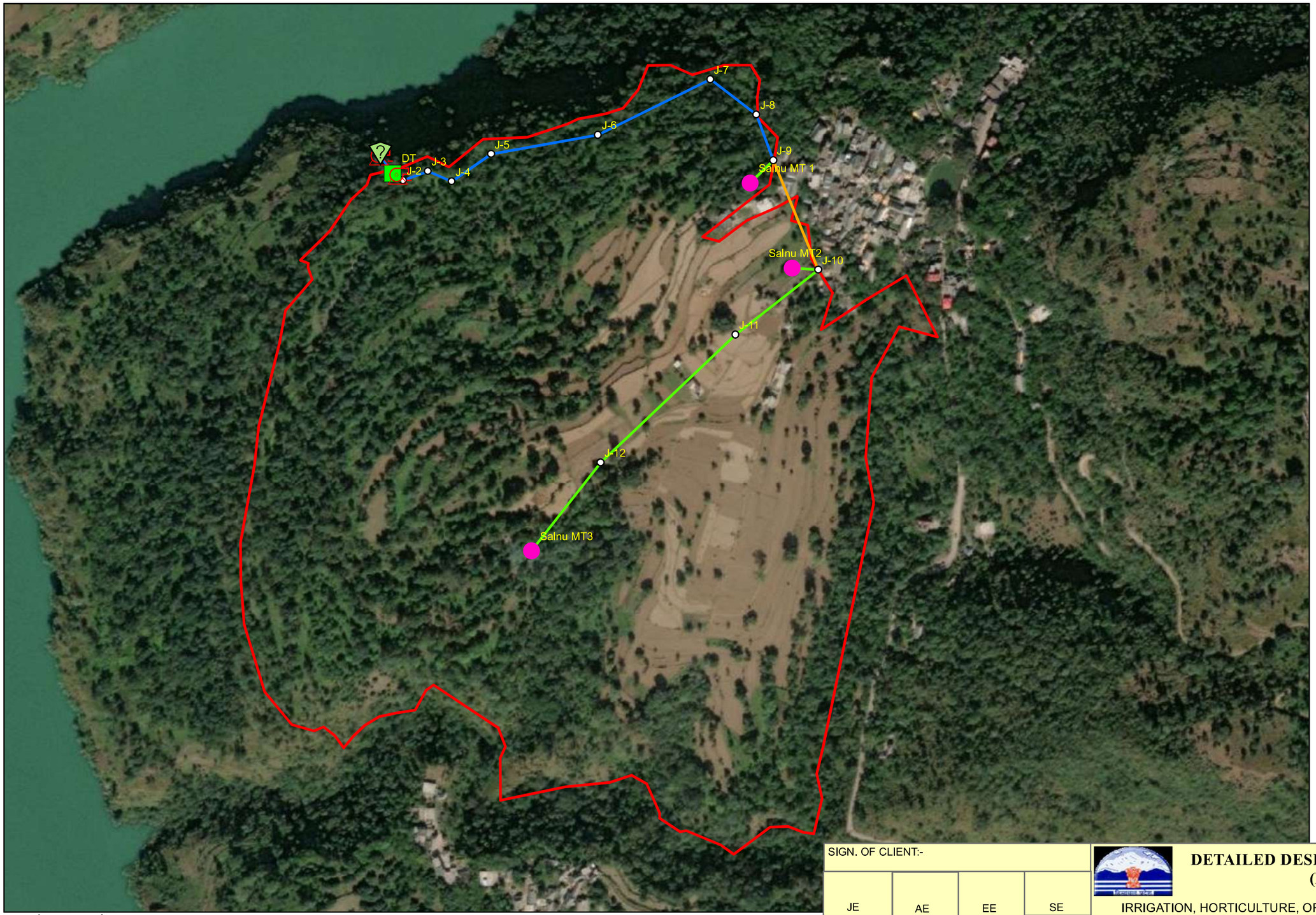

N
W E
S

Legend

- Intake
- Pump
- Junction
- MT
- Tank
- Rising Main 80mm Dia GI Pipe
- Rising Main 100mm Dia GI Pipe
- Rising Main 125mm Dia GI Pipe
- SALNOO

SIGN. OF CLIENT:-

JE	AE	EE	SE

DETAILED DESIGN CONSULTANCY, HP-SHIVA (PACKAGE CS09)

IRRIGATION, HORTICULTURE, ORCHARDS AND VALUE CHAIN DEVELOPMENT

	SIGN.									
	INITIALS									
	REVISIONS									
P0	SIGN.									
	INITIALS	GKJ	ES	DVB			MK	DK	15-06-2022	
	REVISIONS									
ISSUE		DRN	DSN	CHD	CV	EL	IC	ME	PE/PM	APPD.	DATE
					CLEARED						

'P' (PRELIMINARY) ISSUES ARE NOT TO BE USED FOR CONSTRUCTION / FABRICATION BUT ARE ISSUED FOR LIMITED PURPOSES ONLY AS INDICATED IN THE SMALL BLOCK ABOVE THIS BLOCK.

CONSTRUCTION / FABRICATION WORK IS PERMITTED ON 'R' (RELEASED) ISSUES ONLY.

INFORMATION CONTAINED WITHIN 'HOLD' IS NOT RELEASED FOR CONSTUCTION / FABRICATION. FIELD MUST GET DESIGN OFFICE TO CLEAR 'HOLDS' IN TIME BEFORE PROCEEDING WITH ANY CONSTRUCTION/FABRICATION WORK RELATED TO 'HOLDS'.

PURPOSE: FOR TENDER ONLY

Proprietary Notice and Version Control This document contains confidential information for use only by the " Client " ; for the Project under consideration, which is provided for the sole purpose of permitting the recipient to evaluate the information submitted here with.In consideration of receipt of this document; unless agreed to in contrary in the Contract; the recipient agrees to maintain such information in confidence and to not reproduce or otherwise disclose this information to any person outside the recipient's organisation; except that there is no obligation to maintain the confidentiality of any information which was known to the recipient prior to receipt of such information from Tata Consulting Engineers Limited, or becomes publicly known through no fault of recipient, or Tata Consulting Engineers Limited, or is received without obligation of confidentiality from a third party owing no obligation of confidentiality to Tata Consulting Engineers Limited. All information given under this version over rides all and any kind of offers, assumptions, deliverables and contracts submitted verbally (and subsequently communicated in writing) or in writing or otherwise given under any and all previous version/s.

File Name: 12503A-CV-34215-Rev-P0

TITLE:- NETWORK DRAWING OF LIS SALNU FOR SADAR-BILASPUR BLOCK, BILASPUR DISTRICT.

TATACONSULTING ENGINEERS LIMITED.
MUMBAI

SCALE:-	DWG. No:-	ISSUE:-
1:4,000	TCE.12503A-CV-3082-WS-34215	P0
DL.CEN.:- DEL-CV		

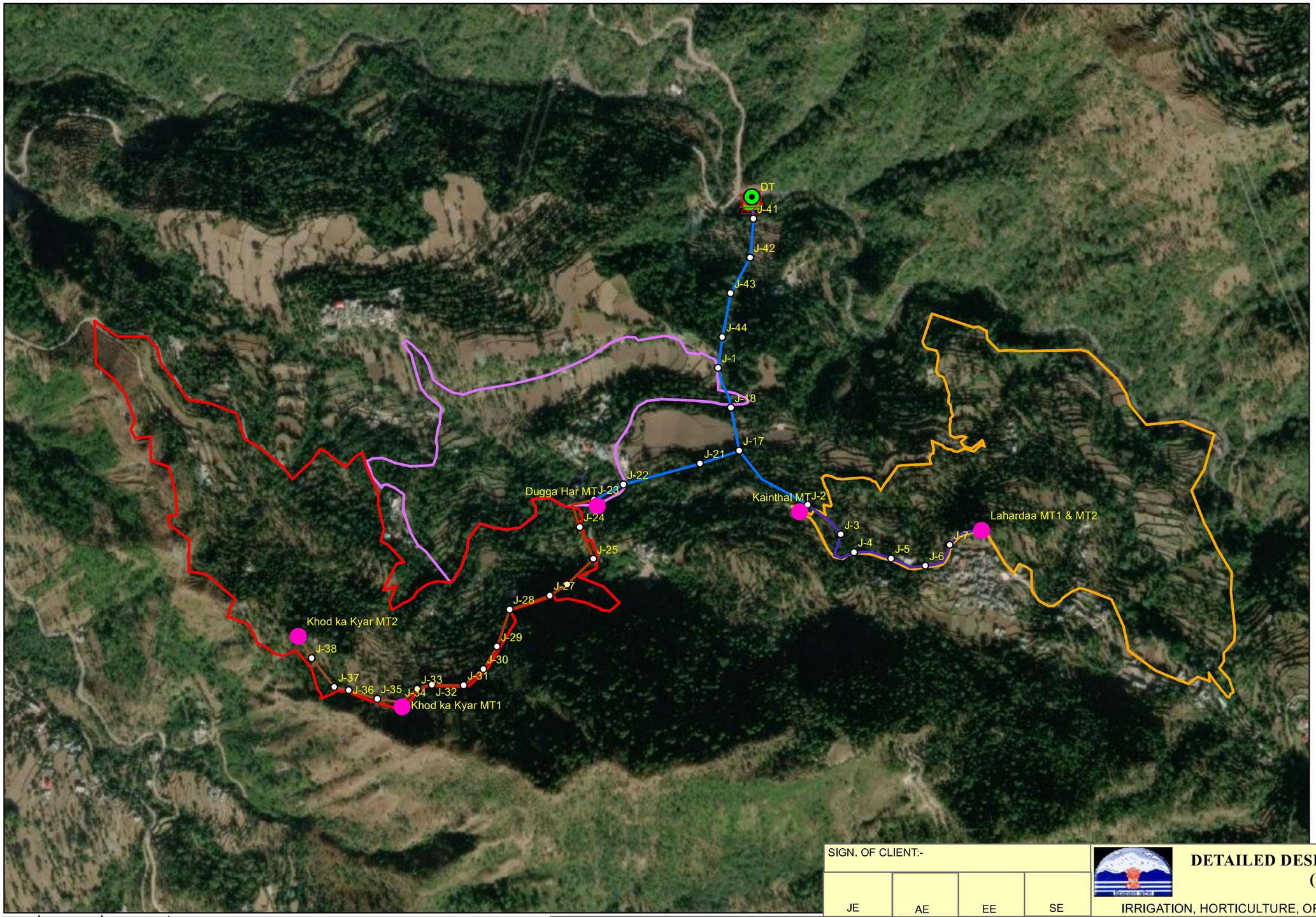

N
W E
S

Legend

- Percolation Well
- Pump
- MT
- Tank
- Junction
- Rising Main 80mm Dia GI Pipe
- Rising Main 100mm Dia GI Pipe
- Rising Main 125mm Dia GI Pipe
- Rising Main 150mm Dia GI Pipe
- LOHARDAA
- Khod_ka__Kyar
- Dugga_Har

SIGN. OF CLIENT:-

JE	AE	EE	SE

DETAILED DESIGN CONSULTANCY, HP-SHIVA (PACKAGE CS09)

IRRIGATION, HORTICULTURE, ORCHARDS AND VALUE CHAIN DEVELOPMENT

	SIGN.								
	INITIALS								
	REVISIONS								
P0	SIGN.								
	INITIALS	GKJ	ES	DVB		MK	DK	15-06-2022	
	REVISIONS								

ISSUE		DRN	DSN	CHD	CV	EL	IC	ME			PE/PM	APPD.	DATE
					CLEARED								

'P' (PRELIMINARY) ISSUES ARE NOT TO BE USED FOR CONSTRUCTION / FABRICATION BUT ARE ISSUED FOR LIMITED PURPOSES ONLY AS INDICATED IN THE SMALL BLOCK ABOVE THIS BLOCK.

CONSTRUCTION / FABRICATION WORK IS PERMITTED ON 'R' (RELEASED) ISSUES ONLY.

INFORMATION CONTAINED WITHIN 'HOLD' IS NOT RELEASED FOR CONSTUCTION / FABRICATION. FIELD MUST GET DESIGN OFFICE TO CLEAR 'HOLDS' IN TIME BEFORE PROCEEDING WITH ANY CONSTRUCTION/FABRICATION WORK RELATED TO 'HOLDS'.

PURPOSE: FOR TENDER ONLY

Proprietary Notice and Version Control This document contains confidential information for use only by the " Client " ; for the Project under consideration, which is provided for the sole purpose of permitting the recipient to evaluate the information submitted here with.In consideration of receipt of this document; unless agreed to in contrary in the Contract; the recipient agrees to maintain such information in confidence and to not reproduce or otherwise disclose this information to any person outside the recipient's organisation; except that there is no obligation to maintain the confidentiality of any information which was known to the recipient prior to receipt of such information from Tata Consulting Engineers Limited, or becomes publicly known through no fault of recipient, or Tata Consulting Engineers Limited, or is received without obligation of confidentiality from a third party owing no obligation of confidentiality to Tata Consulting Engineers Limited. All information given under this version over rides all and any kind of offers, assumptions, deliverables and contracts submitted verbally (and subsequently communicated in writing) or in writing or otherwise given under any and all previous version/s.

File Name: 12503A-CV-34216-Rev-P0

TITLE:- NETWORK DRAWING OF LISPERCOLATION WELL (DUGGA HAR, LOHARDA, KAINTHAL)FOR SADAR-BILASPUR BLOCK, BILASPUR DISTRICT.

TATACONSULTING ENGINEERS LIMITED. MUMBAI

SCALE:- 1:8,000

DL.CEN.:- DEL-CV

DWG. No:- TCE.12503A-CV-3082-WS-34216

ISSUE:- P0

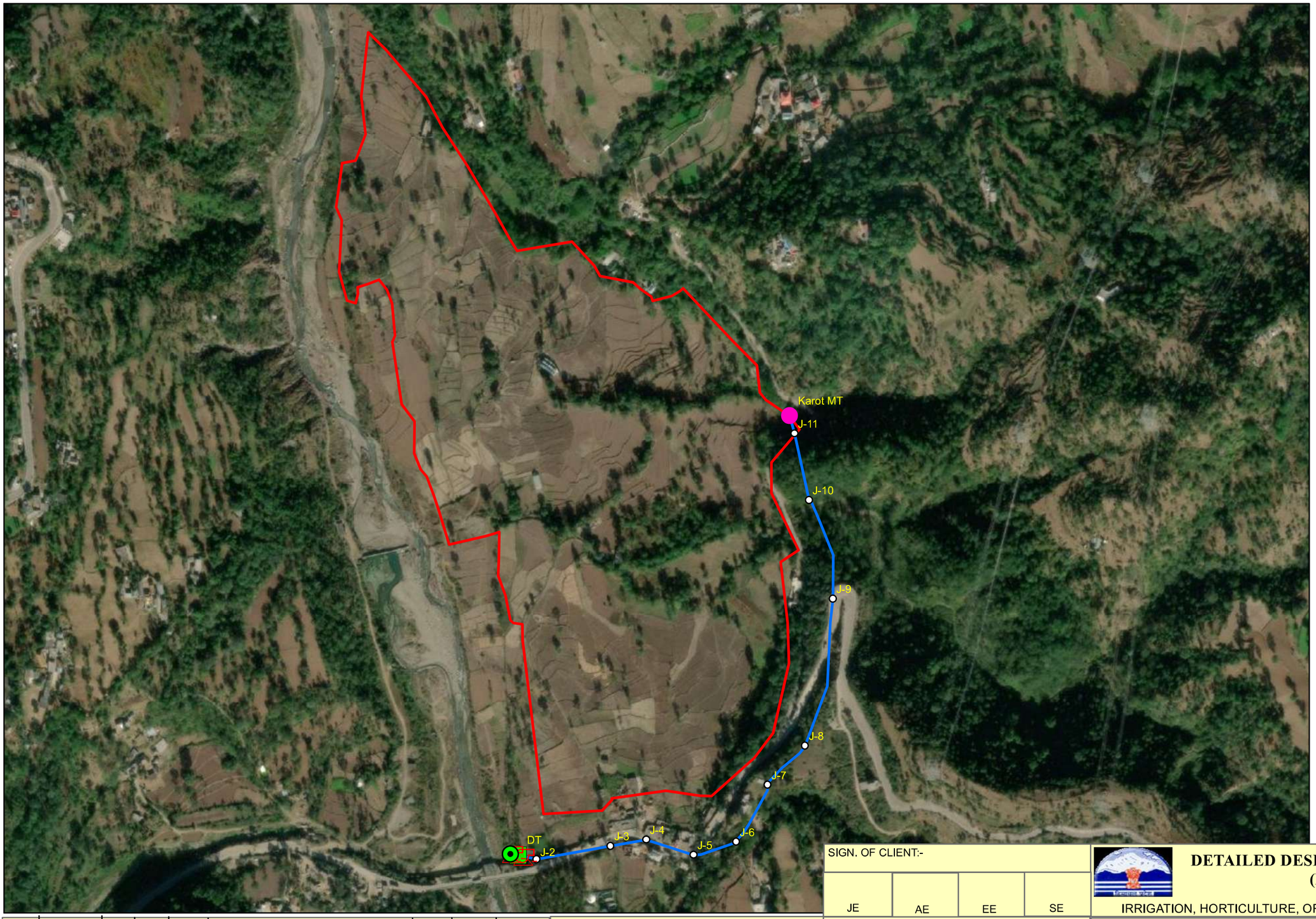

N
W E
S

Legend

- Intake
- Pump
- Junction
- MT
- TANK
- Rising Main 100mm Dia GI Pipe
- KAROT

SIGN. OF CLIENT:-

JE	AE	EE	SE

DETAILED DESIGN CONSULTANCY, HP-SHIVA (PACKAGE CS09)

IRRIGATION, HORTICULTURE, ORCHARDS AND VALUE CHAIN DEVELOPMENT

	SIGN.										
	INITIALS										
	REVISIONS										
P0	SIGN.										
	INITIALS	GKJ	ES	DVB					MK	DK	15-06-2022
	REVISIONS										
ISSUE		DRN	DSN	CHD	CV	EL	IC	ME	PE/PM	APPD.	DATE
					CLEARED						

'P' (PRELIMINARY) ISSUES ARE NOT TO BE USED FOR CONSTRUCTION / FABRICATION BUT ARE ISSUED FOR LIMITED PURPOSES ONLY AS INDICATED IN THE SMALL BLOCK ABOVE THIS BLOCK.

CONSTRUCTION / FABRICATION WORK IS PERMITTED ON 'R' (RELEASED) ISSUES ONLY.

INFORMATION CONTAINED WITHIN 'HOLD' IS NOT RELEASED FOR CONSTUCTION / FABRICATION. FIELD MUST GET DESIGN OFFICE TO CLEAR 'HOLDS' IN TIME BEFORE PROCEEDING WITH ANY CONSTRUCTION/FABRICATION WORK RELATED TO 'HOLDS'.

PURPOSE: FOR TENDER ONLY

Proprietary Notice and Version Control This document contains confidential information for use only by the " Client " ; for the Project under consideration, which is provided for the sole purpose of permitting the recipient to evaluate the information submitted here with.In consideration of receipt of this document; unless agreed to in contrary in the Contract; the recipient agrees to maintain such information in confidence and to not reproduce or otherwise disclose this information to any person outside the recipient's organisation; except that there is no obligation to maintain the confidentiality of any information which was known to the recipient prior to receipt of such information from Tata Consulting Engineers Limited, or becomes publicly known through no fault of recipient, or Tata Consulting Engineers Limited, or is received without obligation of confidentiality from a third party owing no obligation of confidentiality to Tata Consulting Engineers Limited. All information given under this version over rides all and any kind of offers, assumptions, deliverables and contracts submitted verbally (and subsequently communicated in writing) or in writing or otherwise given under any and all previous version/s.

File Name: 12503A-CV-34217-Rev-P0

TITLE:- NETWORK DRAWING OF LIS KAROT FOR SADAR-BILASPUR BLOCK, BILASPUR DISTRICT.

TATACONSULTING ENGINEERS LIMITED.
MUMBAI

SCALE:- 1:5,000

DL.CEN.:- DEL-CV

DWG. No:- TCE.12503A-CV-3082-WS-34217

ISSUE:- P0

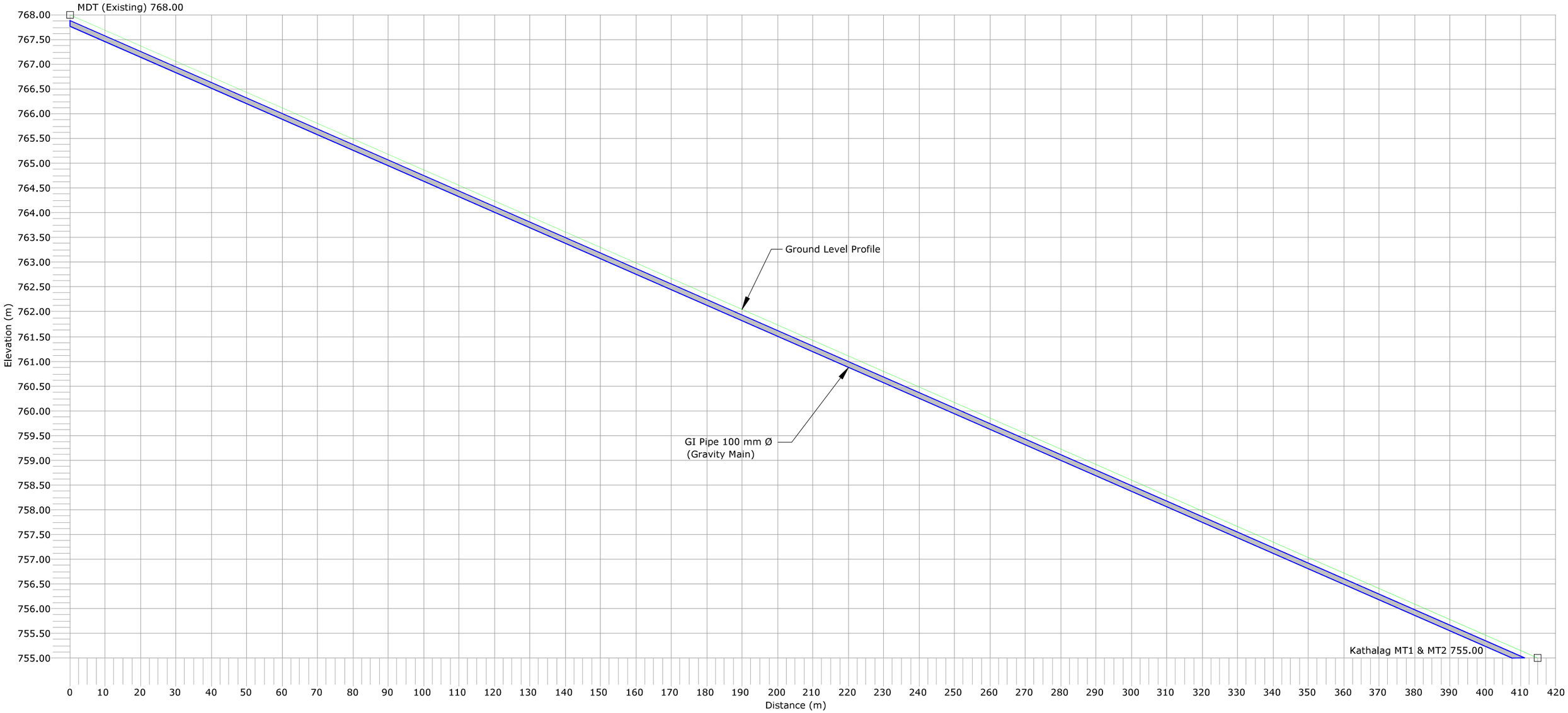

Legend :-

1. Ground Level
2. Rising Main
3. Junction
4. Air Valve
5. Scour Valve

Note:-

1 - Air Valves are Considered to be provided at 500 m c/c and at High Points.
2 - Scour Valves are Provided at 2000 m c/c Distance.
3 - Above is Tentative Arrangement. Based on Actual Site Condition size, Quantity and Location of Proposed Valves May Vary.

	SIGN.													
	INITIALS													
	REVISIONS													
P0	SIGN.													22-06-2022
	INITIALS	BSN	ES	DVB							MK	DK		
	REVISIONS													
ISSUE		DRN	DSN	CHD	CV	EL	IC	ME			PE/PM	APPD	DATE (dd-mm-yyyy)	
					CLEARED									

'P' (PRELIMINARY) ISSUES ARE NOT TO BE USED FOR CONSTRUCTION / FABRICATION BUT ARE ISSUED FOR LIMITED PURPOSES ONLY AS INDICATED IN THE SMALL BLOCK ABOVE THIS BLOCK.

CONSTRUCTION / FABRICATION WORK IS PERMITTED ON 'R' (RELEASED) ISSUES ONLY.

INFORMATION CONTAINED WITHIN 'HOLD' IS NOT RELEASED FOR CONSTUCTION / FABRICATION. FIELD MUST GET DESIGN OFFICE TO CLEAR 'HOLDS' IN TIME BEFORE PROCEEDING WITH ANY CONSTRUCTION/ FABRICATION WORK RELATED TO 'HOLDS'.

SIGN. OF CLIENT:–

JE	AE	EE	SE

PURPOSE : FOR TENDER ONLY

DO NOT SCALE

Proprietary Notice and Version Control This document contains confidential information for use only by the " Client " ; for the Project under consideration, which is provided for the sole purpose of permitting the recipient to evaluate the information submitted herewith. In consideration of receipt of this document; unless agreed to in contrary in the Contract; the recipient agrees to maintain such information in confidence and to not reproduce or otherwise disclose this information to any person outside the recipient's organisation; except that there is no obligation to maintain the confidentiality of any information which was known to the recipient prior to receipt of such information from Tata Consulting Engineers Limited, or becomes publicly known through no fault of recipient, or Tata Consulting Engineers Limited, or is received without obligation of confidentiality from a third party owing no obligation of confidentiality to Tata Consulting Engineers Limited. All information given under this version over rides all and any kind of offers, assumptions, deliverables and contracts submitted verbally (and subsequently communicated in writing) or in writing or otherwise given under any and all previous version/s.

FILE NAME 12503A–CV–34351–Rev–P0

DETAILED DESIGN CONSULTANCY, HP–SHIVA (PACKAGE–CS09)

IRRIGATION, HORTICULTURE, ORCHARDS AND VALUE CHAIN DEVELOPMENT

PROPOSED L–SECTION–LIS DEHRA KOT
GHUMARWIN BLOCK, BILASPUR DISTRICT
(SHEET 1 OF 3)

TATA CONSULTING ENGINEERS LIMITED
MUMBAI

SCALE : NTS	DWG NO. TCE.12503A–CV–3082–WS–34351	ISSUE P0
DC & DISC: DEL–CV		

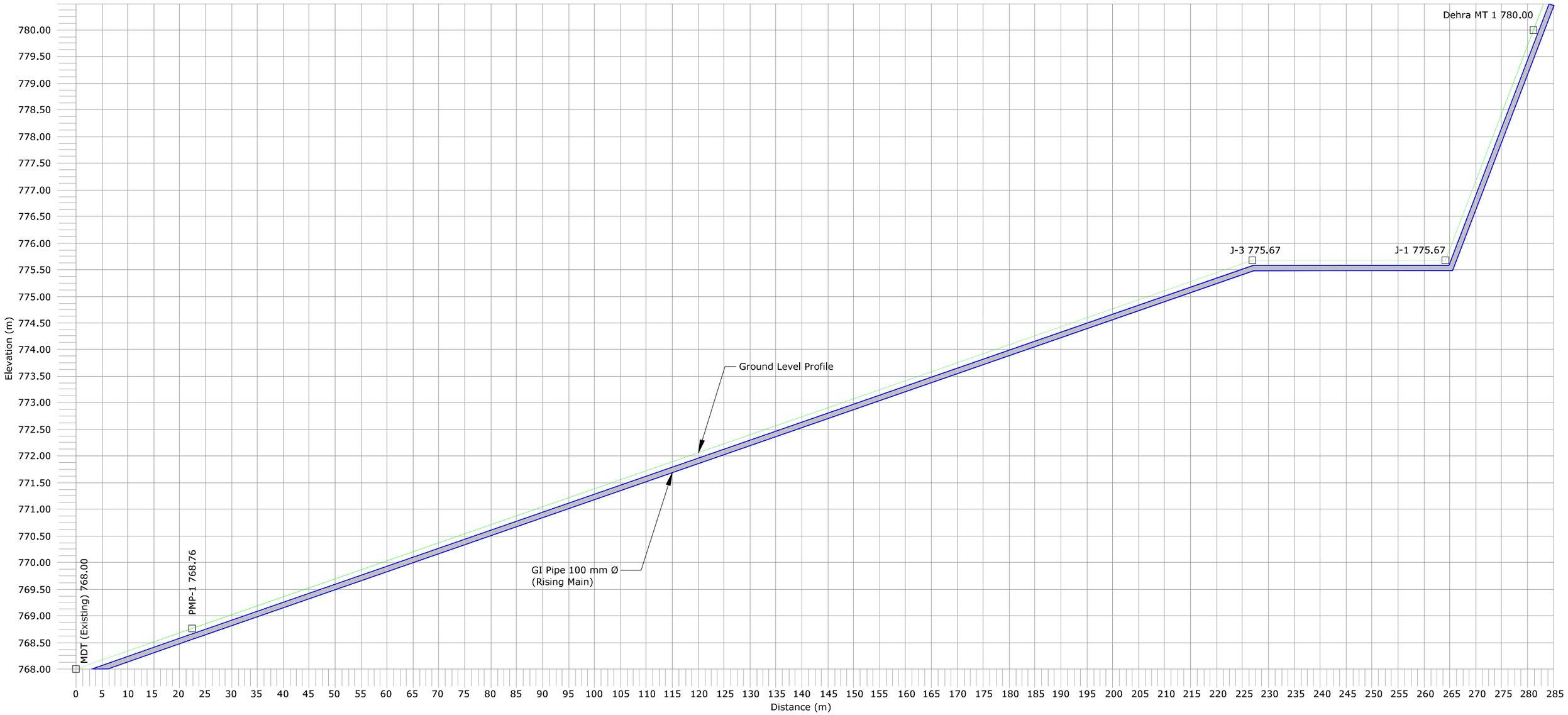

Legend :-

1. Ground Level
2. Rising Main
3. Junction
4. Air Valve
5. Scour Valve

Note:-

1 - Air Valves are Considered to be provided at 500 m c/c and at High Points.
2 - Scour Valves are Provided at 2000 m c/c Distance.
3 - Above is Tentative Arrangement. Based on Actual Site Condition size, Quantity and Location of Proposed Valves May Vary.

	SIGN.													
	INITIALS													
	REVISIONS													
P0	SIGN.													22-06-2022
	INITIALS	BSN	ES	DVB							MK	DK		
	REVISIONS													
ISSUE		DRN	DSN	CHD	CV	EL	IC	ME			PE/PM	APPD	DATE (dd-mm-yyyy)	
					CLEARED									

'P' (PRELIMINARY) ISSUES ARE NOT TO BE USED FOR CONSTRUCTION / FABRICATION BUT ARE ISSUED FOR LIMITED PURPOSES ONLY AS INDICATED IN THE SMALL BLOCK ABOVE THIS BLOCK.

CONSTRUCTION / FABRICATION WORK IS PERMITTED ON 'R' (RELEASED) ISSUES ONLY.

INFORMATION CONTAINED WITHIN 'HOLD' IS NOT RELEASED FOR CONSTUCTION / FABRICATION. FIELD MUST GET DESIGN OFFICE TO CLEAR 'HOLDS' IN TIME BEFORE PROCEEDING WITH ANY CONSTRUCTION/ FABRICATION WORK RELATED TO 'HOLDS'.

SIGN. OF CLIENT:–

JE	AE	EE	SE

PURPOSE : FOR TENDER ONLY

DO NOT SCALE

Proprietary Notice and Version Control This document contains confidential information for use only by the " Client " ; for the Project under consideration, which is provided for the sole purpose of permitting the recipient to evaluate the information submitted herewith. In consideration of receipt of this document; unless agreed to in contrary in the Contract; the recipient agrees to maintain such information in confidence and to not reproduce or otherwise disclose this information to any person outside the recipient's organisation; except that there is no obligation to maintain the confidentiality of any information which was known to the recipient prior to receipt of such information from Tata Consulting Engineers Limited, or becomes publicly known through no fault of recipient, or Tata Consulting Engineers Limited, or is received without obligation of confidentiality from a third party owing no obligation of confidentiality to Tata Consulting Engineers Limited. All information given under this version over rides all and any kind of offers, assumptions, deliverables and contracts submitted verbally (and subsequently communicated in writing) or in writing or otherwise given under any and all previous version/s.

FILE NAME 12503A–CV–34352–Rev–P0

DETAILED DESIGN CONSULTANCY, HP–SHIVA (PACKAGE–CS09)

IRRIGATION, HORTICULTURE, ORCHARDS AND VALUE CHAIN DEVELOPMENT

PROPOSED L–SECTION–LIS DEHRA KOT
GHUMARWIN BLOCK, BILASPUR DISTRICT
(SHEET 2 OF 3)

TATA CONSULTING ENGINEERS LIMITED
MUMBAI

SCALE : NTS	DWG NO. TCE.12503A–CV–3082–WS–34352	ISSUE P0
DC & DISC: DEL–CV		

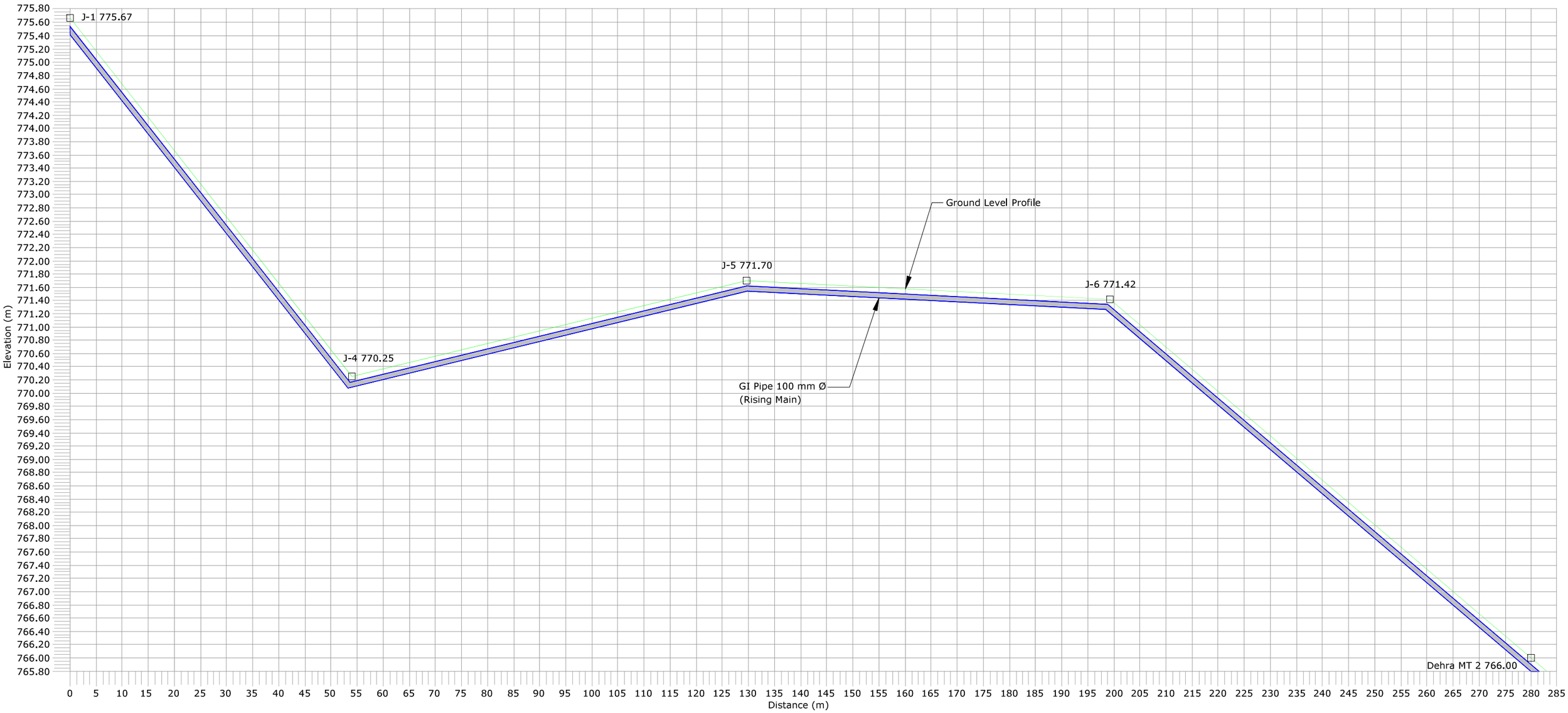

Legend :-

1. Ground Level
2. Rising Main
3. Junction
4. Air Valve
5. Scour Valve

Note:-

1 - Air Valves are Considered to be provided at 500 m c/c and at High Points.
2 - Scour Valves are Provided at 2000 m c/c Distance.
3 - Above is Tentative Arrangement. Based on Actual Site Condition size, Quantity and Location of Proposed Valves May Vary.

	SIGN.													
	INITIALS													
	REVISIONS													
P0	SIGN.													22-06-2022
	INITIALS	BSN	ES	DVB							MK	DK		
	REVISIONS													
ISSUE		DRN	DSN	CHD	CV	EL	IC	ME			PE/PM	APPD	DATE (dd-mm-yyyy)	
					CLEARED									

'P' (PRELIMINARY) ISSUES ARE NOT TO BE USED FOR CONSTRUCTION / FABRICATION BUT ARE ISSUED FOR LIMITED PURPOSES ONLY AS INDICATED IN THE SMALL BLOCK ABOVE THIS BLOCK.

CONSTRUCTION / FABRICATION WORK IS PERMITTED ON 'R' (RELEASED) ISSUES ONLY.

INFORMATION CONTAINED WITHIN 'HOLD' IS NOT RELEASED FOR CONSTUCTION / FABRICATION. FIELD MUST GET DESIGN OFFICE TO CLEAR 'HOLDS' IN TIME BEFORE PROCEEDING WITH ANY CONSTRUCTION/ FABRICATION WORK RELATED TO 'HOLDS'.

SIGN. OF CLIENT:–

JE	AE	EE	SE

PURPOSE : FOR TENDER ONLY

DO NOT SCALE

Proprietary Notice and Version Control This document contains confidential information for use only by the " Client " ; for the Project under consideration, which is provided for the sole purpose of permitting the recipient to evaluate the information submitted herewith. In consideration of receipt of this document; unless agreed to in contrary in the Contract; the recipient agrees to maintain such information in confidence and to not reproduce or otherwise disclose this information to any person outside the recipient's organisation; except that there is no obligation to maintain the confidentiality of any information which was known to the recipient prior to receipt of such information from Tata Consulting Engineers Limited, or becomes publicly known through no fault of recipient, or Tata Consulting Engineers Limited, or is received without obligation of confidentiality from a third party owing no obligation of confidentiality to Tata Consulting Engineers Limited. All information given under this version over rides all and any kind of offers, assumptions, deliverables and contracts submitted verbally (and subsequently communicated in writing) or in writing or otherwise given under any and all previous version/s.

FILE NAME 12503A–CV–34353–Rev–P0

DETAILED DESIGN CONSULTANCY, HP–SHIVA (PACKAGE–CS09)

IRRIGATION, HORTICULTURE, ORCHARDS AND VALUE CHAIN DEVELOPMENT

PROPOSED L–SECTION–LIS DEHRA KOT
GHUMARWIN BLOCK, BILASPUR DISTRICT
(SHEET 3 OF 3)

TATA CONSULTING ENGINEERS LIMITED
MUMBAI

SCALE : NTS	DWG NO. TCE.12503A–CV–3082–WS–34353		ISSUE P0
DC & DISC: DEL–CV			

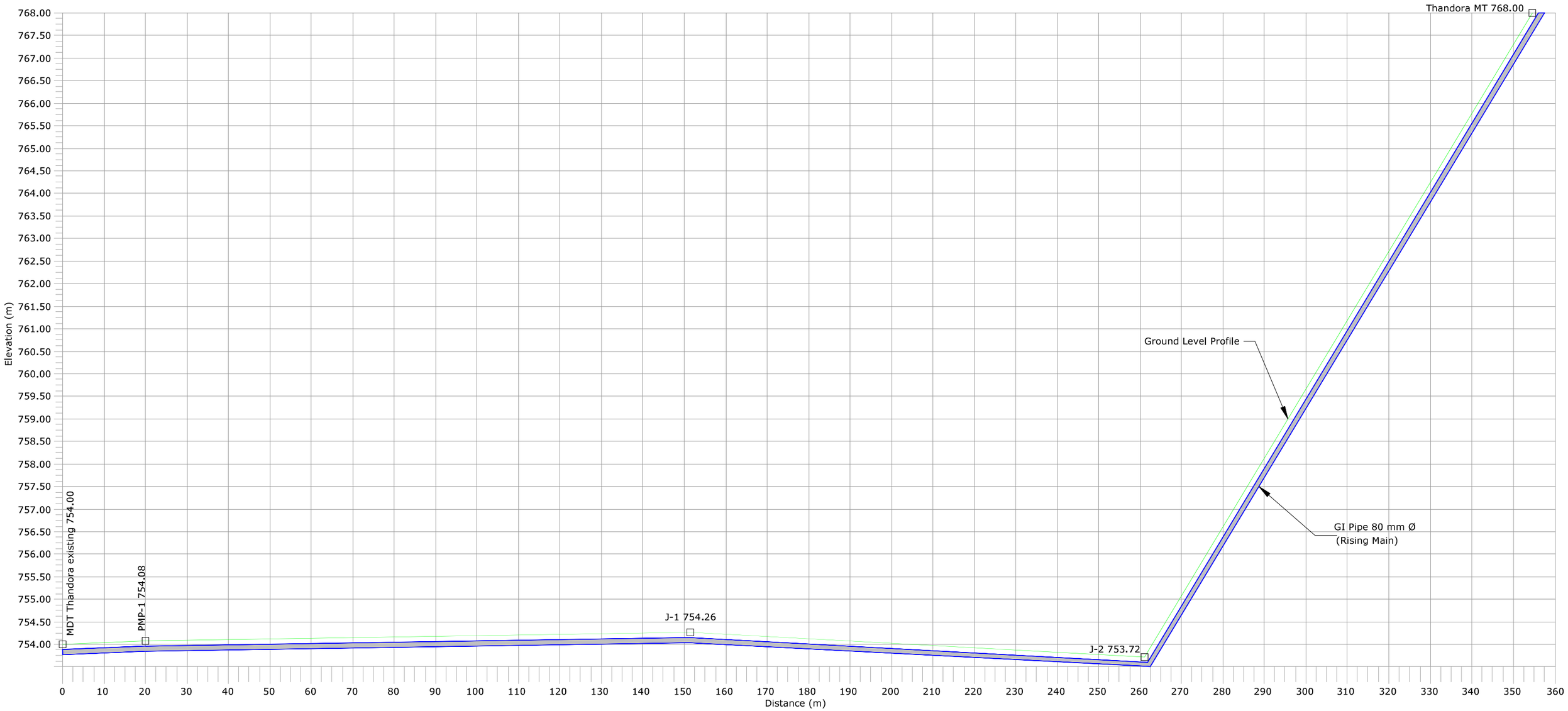

Legend :-

1. Ground Level
2. Rising Main
3. Junction
4. Air Valve
5. Scour Valve

Note:-

1 - Air Valves are Considered to be provided at 500 m c/c and at High Points.
2 - Scour Valves are Provided at 2000 m c/c Distance.
3 - Above is Tentative Arrangement. Based on Actual Site Condition size, Quantity and Location of Proposed Valves May Vary.

	SIGN.													
	INITIALS													
	REVISIONS													
P0	SIGN.													22-06-2022
	INITIALS	BSN	ES	DVB							MK	DK		
	REVISIONS													
ISSUE		DRN	DSN	CHD	CV	EL	IC	ME			PE/PM	APPD	DATE (dd-mm-yyyy)	
					CLEARED									

'P' (PRELIMINARY) ISSUES ARE NOT TO BE USED FOR CONSTRUCTION / FABRICATION BUT ARE ISSUED FOR LIMITED PURPOSES ONLY AS INDICATED IN THE SMALL BLOCK ABOVE THIS BLOCK.

CONSTRUCTION / FABRICATION WORK IS PERMITTED ON 'R' (RELEASED) ISSUES ONLY.

INFORMATION CONTAINED WITHIN 'HOLD' IS NOT RELEASED FOR CONSTUCTION / FABRICATION. FIELD MUST GET DESIGN OFFICE TO CLEAR 'HOLDS' IN TIME BEFORE PROCEEDING WITH ANY CONSTRUCTION/ FABRICATION WORK RELATED TO 'HOLDS'.

SIGN. OF CLIENT:-

JE	AE	EE	SE

PURPOSE : FOR TENDER ONLY

DO NOT SCALE

Proprietary Notice and Version Control This document contains confidential information for use only by the " Client " ; for the Project under consideration, which is provided for the sole purpose of permitting the recipient to evaluate the information submitted herewith. In consideration of receipt of this document; unless agreed to in contrary in the Contract; the recipient agrees to maintain such information in confidence and to not reproduce or otherwise disclose this information to any person outside the recipient's organisation; except that there is no obligation to maintain the confidentiality of any information which was known to the recipient prior to receipt of such information from Tata Consulting Engineers Limited, or becomes publicly known through no fault of recipient, or Tata Consulting Engineers Limited, or is received without obligation of confidentiality from a third party owing no obligation of confidentiality to Tata Consulting Engineers Limited. All information given under this version over rides all and any kind of offers, assumptions, deliverables and contracts submitted verbally (and subsequently communicated in writing) or in writing or otherwise given under any and all previous version/s.

FILE NAME 12503A-CV-34354-Rev-P0

DETAILED DESIGN CONSULTANCY, HP-SHIVA (PACKAGE-CS09)

IRRIGATION, HORTICULTURE, ORCHARDS AND VALUE CHAIN DEVELOPMENT

PROPOSED L-SECTION-LIS LAJANTA
GHUMARWIN BLOCK, BILASPUR DISTRICT
(SHEET 1 OF 2)

TATA CONSULTING ENGINEERS LIMITED
MUMBAI

SCALE : NTS	DWG NO. TCE.12503A-CV-3082-WS-34354		ISSUE P0
DC & DISC: DEL-CV			

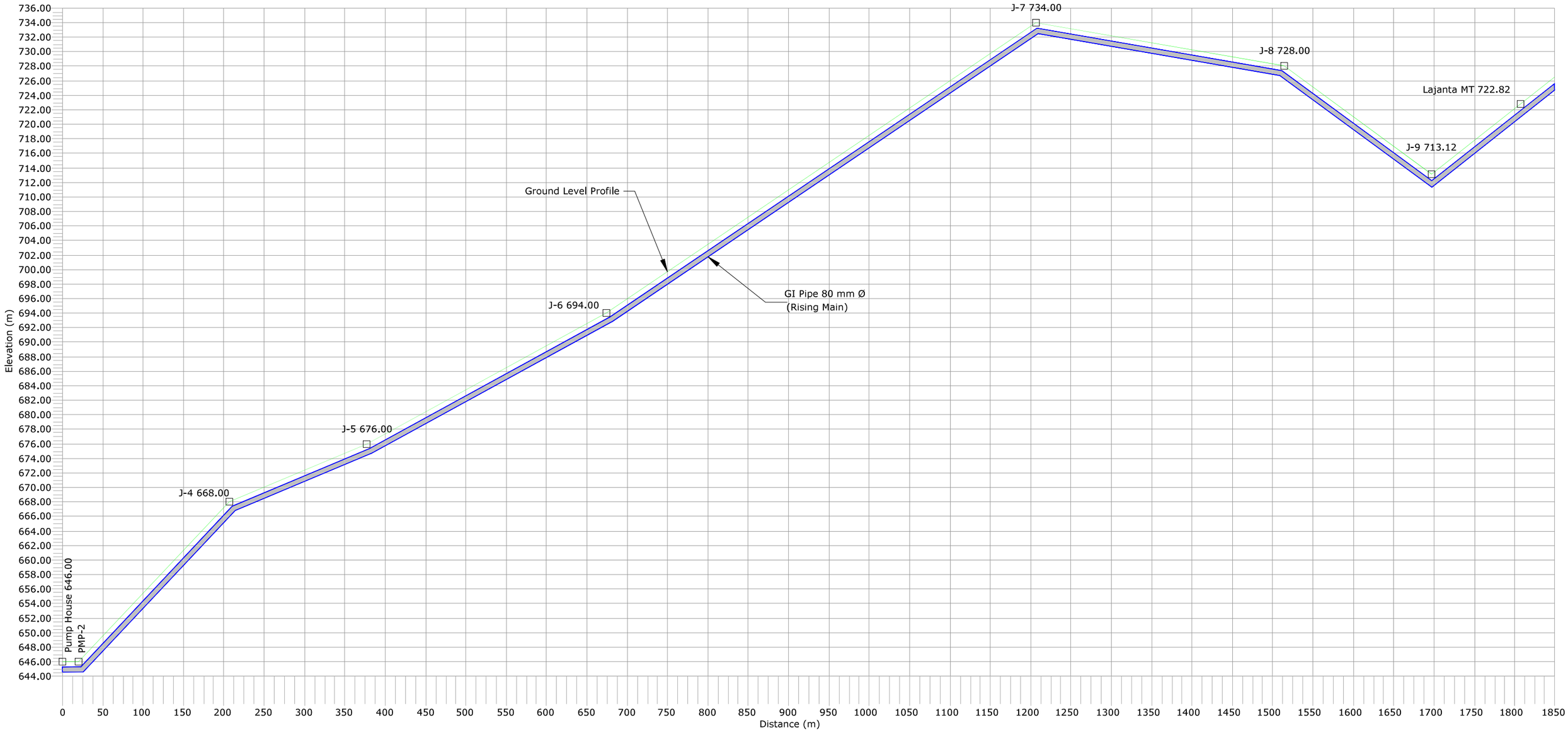

Legend :-

1. Ground Level
2. Rising Main
3. Junction
4. Air Valve
5. Scour Valve

Note:-

1 - Air Valves are Considered to be provided at 500 m c/c and at High Points.
2 - Scour Valves are Provided at 2000 m c/c Distance.
3 - Above is Tentative Arrangement. Based on Actual Site Condition size, Quantity and Location of Proposed Valves May Vary.

	SIGN.												
	INITIALS												
	REVISIONS												
P0	SIGN.												22-06-2022
	INITIALS	BSN	ES	DVB							MK	DK	
	REVISIONS												
ISSUE		DRN	DSN	CHD	CV	EL	IC	ME			PE/PM	APPD	DATE (dd-mm-yyyy)
					CLEARED								

'P' (PRELIMINARY) ISSUES ARE NOT TO BE USED FOR CONSTRUCTION / FABRICATION BUT ARE ISSUED FOR LIMITED PURPOSES ONLY AS INDICATED IN THE SMALL BLOCK ABOVE THIS BLOCK.

CONSTRUCTION / FABRICATION WORK IS PERMITTED ON 'R' (RELEASED) ISSUES ONLY.

INFORMATION CONTAINED WITHIN 'HOLD' IS NOT RELEASED FOR CONSTUCTION / FABRICATION. FIELD MUST GET DESIGN OFFICE TO CLEAR 'HOLDS' IN TIME BEFORE PROCEEDING WITH ANY CONSTRUCTION/ FABRICATION WORK RELATED TO 'HOLDS'.

SIGN. OF CLIENT:–

JE	AE	EE	SE

PURPOSE : FOR TENDER ONLY

DO NOT SCALE

Proprietary Notice and Version Control This document contains confidential information for use only by the " Client " ; for the Project under consideration, which is provided for the sole purpose of permitting the recipient to evaluate the information submitted herewith. In consideration of receipt of this document; unless agreed to in contrary in the Contract; the recipient agrees to maintain such information in confidence and to not reproduce or otherwise disclose this information to any person outside the recipient's organisation; except that there is no obligation to maintain the confidentiality of any information which was known to the recipient prior to receipt of such information from Tata Consulting Engineers Limited, or becomes publicly known through no fault of recipient, or Tata Consulting Engineers Limited, or is received without obligation of confidentiality from a third party owing no obligation of confidentiality to Tata Consulting Engineers Limited. All information given under this version over rides all and any kind of offers, assumptions, deliverables and contracts submitted verbally (and subsequently communicated in writing) or in writing or otherwise given under any and all previous version/s.

FILE NAME 12503A–CV–34355–Rev–P0

DETAILED DESIGN CONSULTANCY, HP–SHIVA (PACKAGE–CS09)

IRRIGATION, HORTICULTURE, ORCHARDS AND VALUE CHAIN DEVELOPMENT

PROPOSED L–SECTION–LIS LAJANTA
GHUMARWIN BLOCK, BILASPUR DISTRICT
(SHEET 2 OF 2)

TATA CONSULTING ENGINEERS LIMITED
MUMBAI

SCALE : NTS	DWG NO. TCE.12503A–CV–3082–WS–34355		ISSUE P0
DC & DISC: DEL–CV			

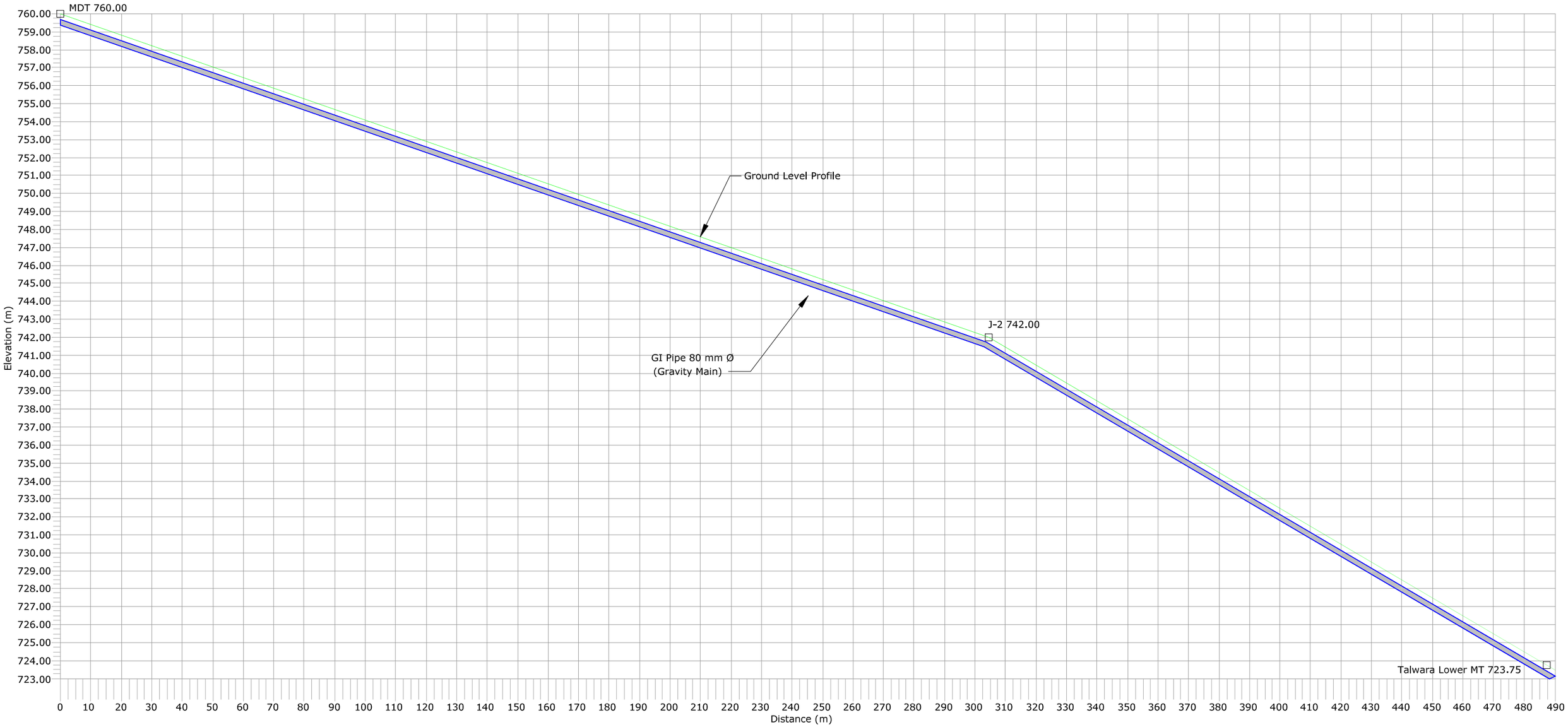

Legend :-

1. Ground Level
2. Rising Main
3. Junction
4. Air Valve
5. Scour Valve

Note:-

1 - Air Valves are Considered to be provided at 500 m c/c and at High Points.
2 - Scour Valves are Provided at 2000 m c/c Distance.
3 - Above is Tentative Arrangement. Based on Actual Site Condition size, Quantity and Location of Proposed Valves May Vary.

	SIGN.													
	INITIALS													
	REVISIONS													
P0	SIGN.													22-06-2022
	INITIALS	BSN	ES	DVB							MK	DK		
	REVISIONS													
ISSUE		DRN	DSN	CHD	CV	EL	IC	ME			PE/PM	APPD	DATE (dd-mm-yyyy)	
					CLEARED									

'P' (PRELIMINARY) ISSUES ARE NOT TO BE USED FOR CONSTRUCTION / FABRICATION BUT ARE ISSUED FOR LIMITED PURPOSES ONLY AS INDICATED IN THE SMALL BLOCK ABOVE THIS BLOCK.

CONSTRUCTION / FABRICATION WORK IS PERMITTED ON 'R' (RELEASED) ISSUES ONLY.

INFORMATION CONTAINED WITHIN 'HOLD' IS NOT RELEASED FOR CONSTUCTION / FABRICATION. FIELD MUST GET DESIGN OFFICE TO CLEAR 'HOLDS' IN TIME BEFORE PROCEEDING WITH ANY CONSTRUCTION/ FABRICATION WORK RELATED TO 'HOLDS'.

SIGN. OF CLIENT:-

JE	AE	EE	SE

PURPOSE : FOR TENDER ONLY

DO NOT SCALE

Proprietary Notice and Version Control This document contains confidential information for use only by the " Client " ; for the Project under consideration, which is provided for the sole purpose of permitting the recipient to evaluate the information submitted herewith. In consideration of receipt of this document; unless agreed to in contrary in the Contract; the recipient agrees to maintain such information in confidence and to not reproduce or otherwise disclose this information to any person outside the recipient's organisation; except that there is no obligation to maintain the confidentiality of any information which was known to the recipient prior to receipt of such information from Tata Consulting Engineers Limited, or becomes publicly known through no fault of recipient, or Tata Consulting Engineers Limited, or is received without obligation of confidentiality from a third party owing no obligation of confidentiality to Tata Consulting Engineers Limited. All information given under this version over rides all and any kind of offers, assumptions, deliverables and contracts submitted verbally (and subsequently communicated in writing) or in writing or otherwise given under any and all previous version/s.

FILE NAME 12503A-CV-34356-Rev-P0

DETAILED DESIGN CONSULTANCY, HP-SHIVA (PACKAGE-CS09)

IRRIGATION, HORTICULTURE, ORCHARDS AND VALUE CHAIN DEVELOPMENT

PROPOSED L-SECTION-LIS TALWARA
GHUMARWIN BLOCK, BILASPUR DISTRICT
(SHEET 1 OF 3)

TATA CONSULTING ENGINEERS LIMITED
MUMBAI

SCALE : NTS	DWG NO. TCE.12503A-CV-3082-WS-34356	ISSUE P0
DC & DISC: DEL-CV		

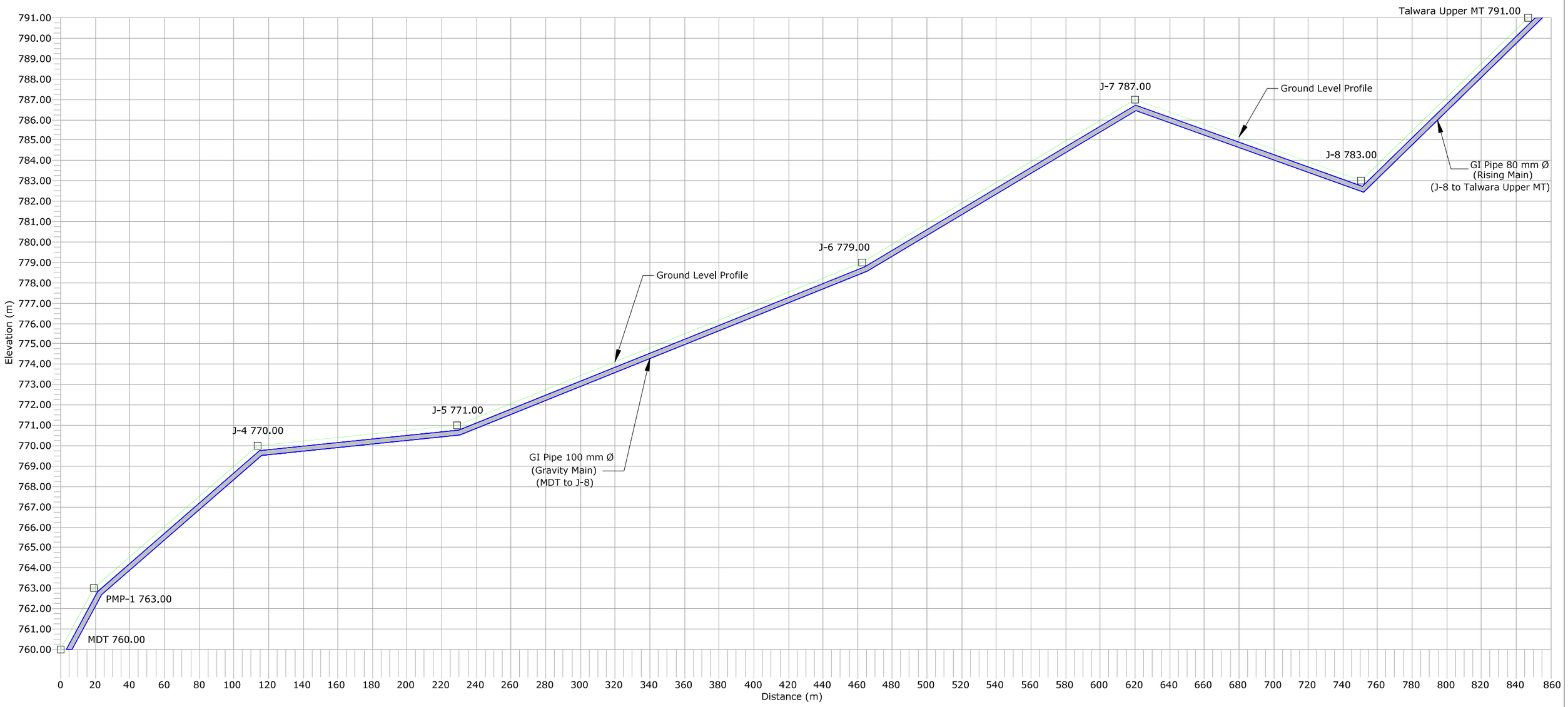

Legend :-

1. Ground Level
2. Rising Main
3. Junction
4. Air Valve
5. Scour Valve

Note:-

1 - Air Valves are Considered to be provided at 500 m c/c and at High Points.

2 - Scour Valves are Provided at 2000 m c/c Distance.

3 - Above is Tentative Arrangement. Based on Actual Site Condition size, Quantity and Location of Proposed Valves May Vary.

	SIGN.												
	INITIALS												
	REVISIONS												
P0	SIGN.												22-06-2022
	INITIALS	BSN	ES	DVB							MK	DK	
	REVISIONS												
ISSUE		DRN	DSN	CHD	CV	EL	IC	ME			PE/PM	APPD	DATE (dd-mm-yyyy)
					CLEARED								

'P' (PRELIMINARY) ISSUES ARE NOT TO BE USED FOR CONSTRUCTION / FABRICATION BUT ARE ISSUED FOR LIMITED PURPOSES ONLY AS INDICATED IN THE SMALL BLOCK ABOVE THIS BLOCK.

CONSTRUCTION / FABRICATION WORK IS PERMITTED ON 'R' (RELEASED) ISSUES ONLY.

INFORMATION CONTAINED WITHIN 'HOLD' IS NOT RELEASED FOR CONSTUCTION / FABRICATION. FIELD MUST GET DESIGN OFFICE TO CLEAR 'HOLDS' IN TIME BEFORE PROCEEDING WITH ANY CONSTRUCTION/ FABRICATION WORK RELATED TO 'HOLDS'.

SIGN. OF CLIENT:-

JE	AE	EE	SE

PURPOSE : FOR TENDER ONLY

DO NOT SCALE

Proprietary Notice and Version Control This document contains confidential information for use only by the " Client " ; for the Project under consideration, which is provided for the sole purpose of permitting the recipient to evaluate the information submitted herewith. In consideration of receipt of this document; unless agreed to in contrary in the Contract; the recipient agrees to maintain such information in confidence and to not reproduce or otherwise disclose this information to any person outside the recipient's organisation; except that there is no obligation to maintain the confidentiality of any information which was known to the recipient prior to receipt of such information from Tata Consulting Engineers Limited, or becomes publicly known through no fault of recipient, or Tata Consulting Engineers Limited, or is received without obligation of confidentiality from a third party owing no obligation of confidentiality to Tata Consulting Engineers Limited. All information given under this version over rides all and any kind of offers, assumptions, deliverables and contracts submitted verbally (and subsequently communicated in writing) or in writing or otherwise given under any and all previous version/s.

FILE NAME 12503A-CV-34357-Rev-P0

DETAILED DESIGN CONSULTANCY, HP-SHIVA (PACKAGE-CS09)

IRRIGATION, HORTICULTURE, ORCHARDS AND VALUE CHAIN DEVELOPMENT

PROPOSED L-SECTION-LIS TALWARA

GHUMARWIN BLOCK, BILASPUR DISTRICT

(SHEET 2 OF 3)

TATA CONSULTING ENGINEERS LIMITED

MUMBAI

SCALE : NTS	DWG NO. TCE.12503A-CV-3082-WS-34357	ISSUE P0
DC & DISC: DEL-CV		

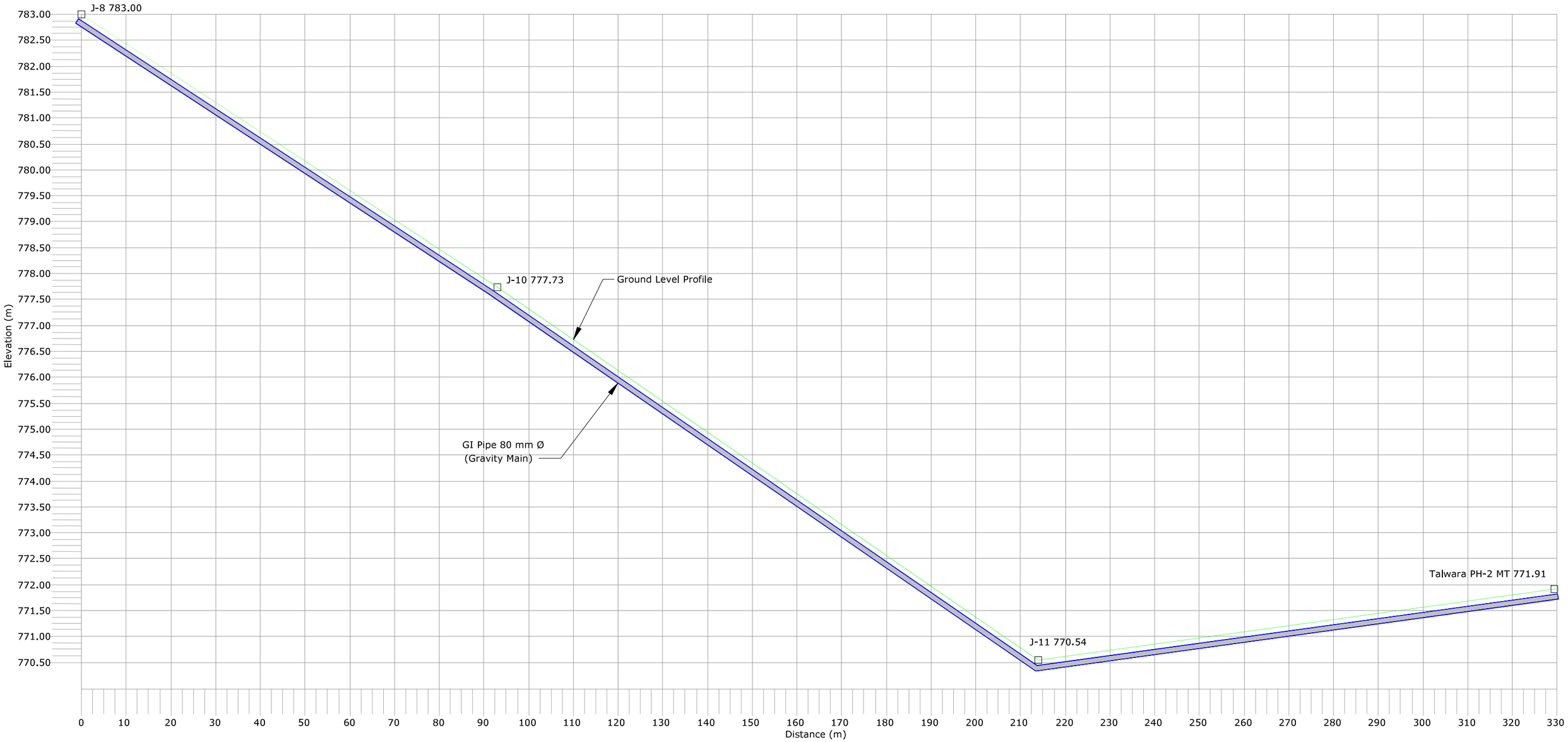

Legend :-

1. Ground Level
2. Rising Main
3. Junction
4. Air Valve
5. Scour Valve

Note:-

1 - Air Valves are Considered to be provided at 500 m c/c and at High Points.
2 - Scour Valves are Provided at 2000 m c/c Distance.
3 - Above is Tentative Arrangement. Based on Actual Site Condition size, Quantity and Location of Proposed Valves May Vary.

ISSUE		DRN	DSN	CHD	CV	EL	IC	ME			PE/PM	APPD	DATE (dd-mm-yyyy)
	SIGN.												
	INITIALS												
	REVISIONS												
P0	SIGN.												22-06-2022
	INITIALS	BSN	ES	DVB							MK	DK	
	REVISIONS												
					CLEARED								

'P' (PRELIMINARY) ISSUES ARE NOT TO BE USED FOR CONSTRUCTION / FABRICATION BUT ARE ISSUED FOR LIMITED PURPOSES ONLY AS INDICATED IN THE SMALL BLOCK ABOVE THIS BLOCK.

CONSTRUCTION / FABRICATION WORK IS PERMITTED ON 'R' (RELEASED) ISSUES ONLY.

INFORMATION CONTAINED WITHIN 'HOLD' IS NOT RELEASED FOR CONSTUCTION / FABRICATION. FIELD MUST GET DESIGN OFFICE TO CLEAR 'HOLDS' IN TIME BEFORE PROCEEDING WITH ANY CONSTRUCTION/ FABRICATION WORK RELATED TO 'HOLDS'.

SIGN. OF CLIENT:–

JE	AE	EE	SE

PURPOSE : FOR TENDER ONLY

DO NOT SCALE

Proprietary Notice and Version Control This document contains confidential information for use only by the " Client " ; for the Project under consideration, which is provided for the sole purpose of permitting the recipient to evaluate the information submitted herewith. In consideration of receipt of this document; unless agreed to in contrary in the Contract; the recipient agrees to maintain such information in confidence and to not reproduce or otherwise disclose this information to any person outside the recipient's organisation; except that there is no obligation to maintain the confidentiality of any information which was known to the recipient prior to receipt of such information from Tata Consulting Engineers Limited, or becomes publicly known through no fault of recipient, or Tata Consulting Engineers Limited, or is received without obligation of confidentiality from a third party owing no obligation of confidentiality to Tata Consulting Engineers Limited. All information given under this version over rides all and any kind of offers, assumptions, deliverables and contracts submitted verbally (and subsequently communicated in writing) or in writing or otherwise given under any and all previous version/s.

FILE NAME 12503A–CV–34358–Rev–P0

DETAILED DESIGN CONSULTANCY, HP–SHIVA (PACKAGE–CS09)

IRRIGATION, HORTICULTURE, ORCHARDS AND VALUE CHAIN DEVELOPMENT

PROPOSED L–SECTION–LIS TALWARA
GHUMARWIN BLOCK, BILASPUR DISTRICT
(SHEET 3 OF 3)

TATA CONSULTING ENGINEERS LIMITED
MUMBAI

SCALE : NTS	DWG NO. TCE.12503A–CV–3082–WS–34358	ISSUE P0
DC & DISC: DEL–CV		

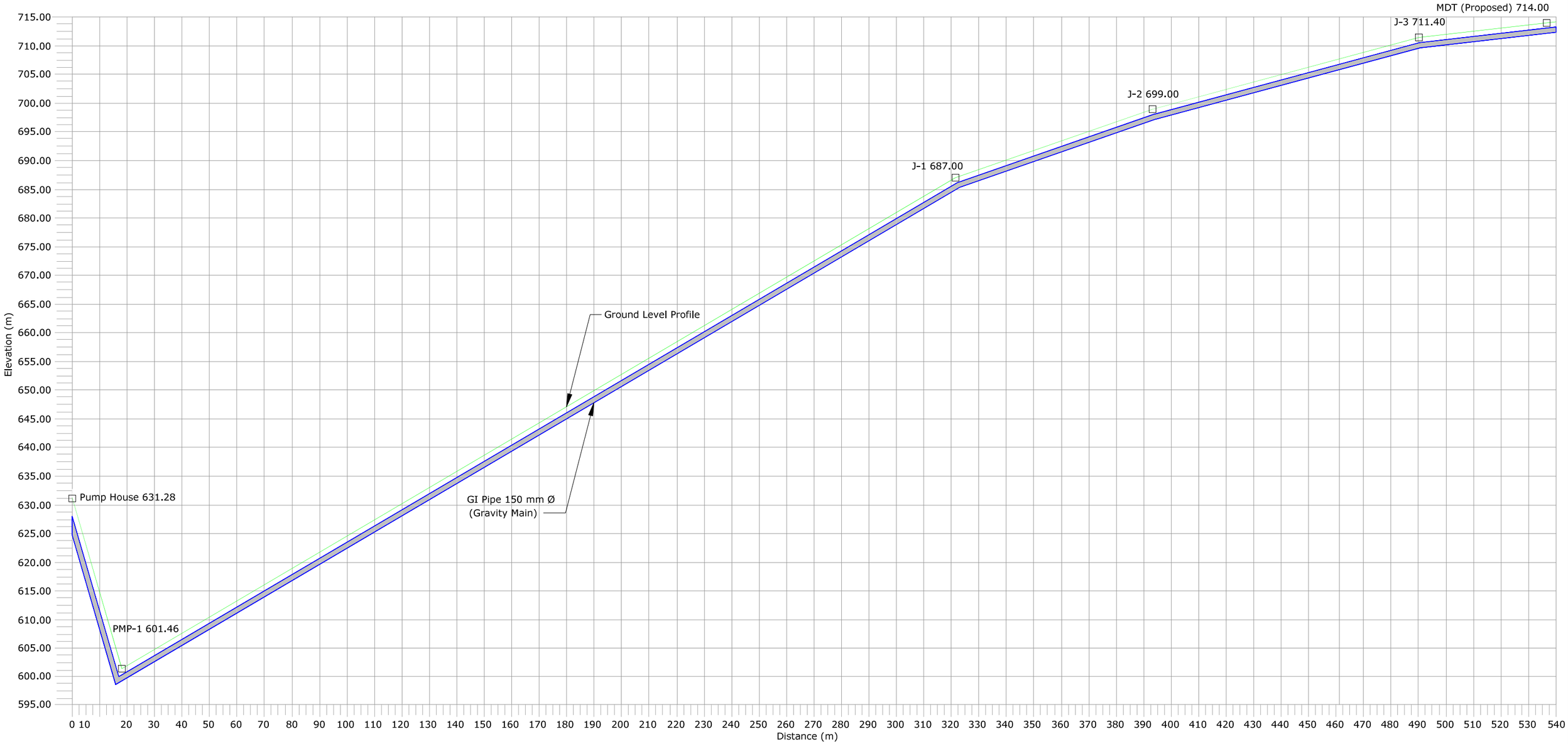

Legend :-

1. Ground Level
2. Rising Main
3. Junction
4. Air Valve
5. Scour Valve

Note:-

1 - Air Valves are Considered to be provided at 500 m c/c and at High Points.
2 - Scour Valves are Provided at 2000 m c/c Distance.
3 - Above is Tentative Arrangement. Based on Actual Site Condition size, Quantity and Location of Proposed Valves May Vary.

	SIGN.													
	INITIALS													
	REVISIONS													
P0	SIGN.													22-06-2022
	INITIALS	BSN	ES	DVB							MK	DK		
	REVISIONS													
ISSUE		DRN	DSN	CHD	CV	EL	IC	ME			PE/PM	APPD	DATE (dd-mm-yyyy)	
					CLEARED									

'P' (PRELIMINARY) ISSUES ARE NOT TO BE USED FOR CONSTRUCTION / FABRICATION BUT ARE ISSUED FOR LIMITED PURPOSES ONLY AS INDICATED IN THE SMALL BLOCK ABOVE THIS BLOCK.

CONSTRUCTION / FABRICATION WORK IS PERMITTED ON 'R' (RELEASED) ISSUES ONLY.

INFORMATION CONTAINED WITHIN 'HOLD' IS NOT RELEASED FOR CONSTUCTION / FABRICATION. FIELD MUST GET DESIGN OFFICE TO CLEAR 'HOLDS' IN TIME BEFORE PROCEEDING WITH ANY CONSTRUCTION/ FABRICATION WORK RELATED TO 'HOLDS'.

SIGN. OF CLIENT:-

JE	AE	EE	SE

PURPOSE : FOR TENDER ONLY

DO NOT SCALE

Proprietary Notice and Version Control This document contains confidential information for use only by the " Client " ; for the Project under consideration, which is provided for the sole purpose of permitting the recipient to evaluate the information submitted herewith. In consideration of receipt of this document; unless agreed to in contrary in the Contract; the recipient agrees to maintain such information in confidence and to not reproduce or otherwise disclose this information to any person outside the recipient's organisation; except that there is no obligation to maintain the confidentiality of any information which was known to the recipient prior to receipt of such information from Tata Consulting Engineers Limited, or becomes publicly known through no fault of recipient, or Tata Consulting Engineers Limited, or is received without obligation of confidentiality from a third party owing no obligation of confidentiality to Tata Consulting Engineers Limited. All information given under this version over rides all and any kind of offers, assumptions, deliverables and contracts submitted verbally (and subsequently communicated in writing) or in writing or otherwise given under any and all previous version/s.

FILE NAME 12503A-CV-34359-Rev-P0

DETAILED DESIGN CONSULTANCY, HP-SHIVA (PACKAGE-CS09)

IRRIGATION, HORTICULTURE, ORCHARDS AND VALUE CHAIN DEVELOPMENT

PROPOSED L-SECTION-LIS KASOL
GHUMARWIN BLOCK, BILASPUR DISTRICT
(SHEET 1 OF 5)

TATA CONSULTING ENGINEERS LIMITED
MUMBAI

SCALE : NTS	DWG NO. TCE.12503A-CV-3082-WS-34359	ISSUE P0
DC & DISC: DEL-CV		

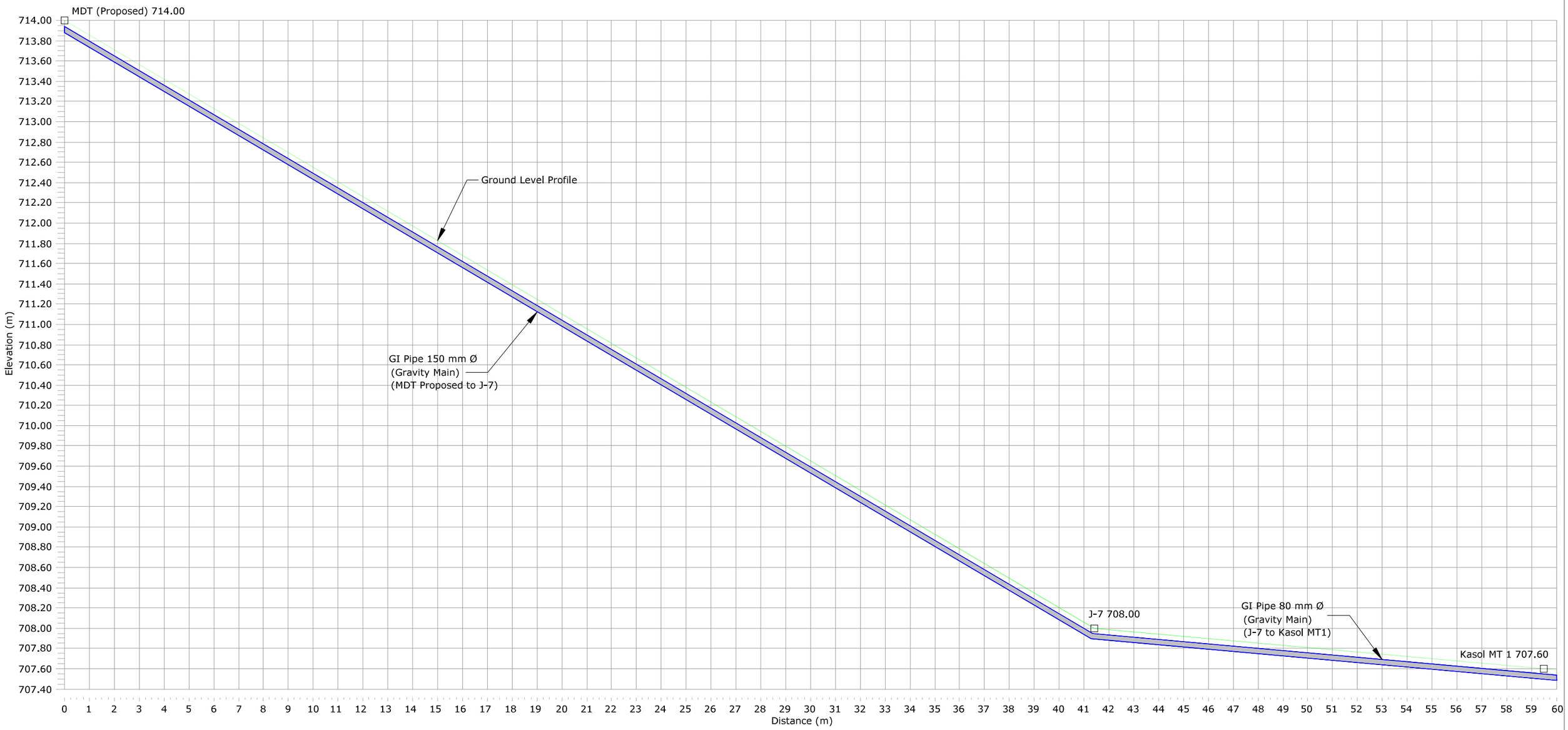

Legend :-

1. Ground Level
2. Rising Main
3. Junction
4. Air Valve
5. Scour Valve

Note:-

1 - Air Valves are Considered to be provided at 500 m c/c and at High Points.
2 - Scour Valves are Provided at 2000 m c/c Distance.
3 - Above is Tentative Arrangement. Based on Actual Site Condition size, Quantity and Location of Proposed Valves May Vary.

	SIGN.													
	INITIALS													
	REVISIONS													
P0	SIGN.													22-06-2022
	INITIALS	BSN	ES	DVB							MK	DK		
	REVISIONS													
ISSUE		DRN	DSN	CHD	CV	EL	IC	ME			PE/PM	APPD	DATE (dd-mm-yyyy)	
					CLEARED									

'P' (PRELIMINARY) ISSUES ARE NOT TO BE USED FOR CONSTRUCTION / FABRICATION BUT ARE ISSUED FOR LIMITED PURPOSES ONLY AS INDICATED IN THE SMALL BLOCK ABOVE THIS BLOCK.

CONSTRUCTION / FABRICATION WORK IS PERMITTED ON 'R' (RELEASED) ISSUES ONLY.

INFORMATION CONTAINED WITHIN 'HOLD' IS NOT RELEASED FOR CONSTUCTION / FABRICATION. FIELD MUST GET DESIGN OFFICE TO CLEAR 'HOLDS' IN TIME BEFORE PROCEEDING WITH ANY CONSTRUCTION/ FABRICATION WORK RELATED TO 'HOLDS'.

SIGN. OF CLIENT:-

JE	AE	EE	SE

PURPOSE : FOR TENDER ONLY

DO NOT SCALE

Proprietary Notice and Version Control This document contains confidential information for use only by the " Client " ; for the Project under consideration, which is provided for the sole purpose of permitting the recipient to evaluate the information submitted herewith. In consideration of receipt of this document; unless agreed to in contrary in the Contract; the recipient agrees to maintain such information in confidence and to not reproduce or otherwise disclose this information to any person outside the recipient's organisation; except that there is no obligation to maintain the confidentiality of any information which was known to the recipient prior to receipt of such information from Tata Consulting Engineers Limited, or becomes publicly known through no fault of recipient, or Tata Consulting Engineers Limited, or is received without obligation of confidentiality from a third party owing no obligation of confidentiality to Tata Consulting Engineers Limited. All information given under this version over rides all and any kind of offers, assumptions, deliverables and contracts submitted verbally (and subsequently communicated in writing) or in writing or otherwise given under any and all previous version/s.

FILE NAME 12503A-CV-34360-Rev-P0

DETAILED DESIGN CONSULTANCY, HP-SHIVA (PACKAGE-CS09)

IRRIGATION, HORTICULTURE, ORCHARDS AND VALUE CHAIN DEVELOPMENT

PROPOSED L-SECTION-LIS KASOL
GHUMARWIN BLOCK, BILASPUR DISTRICT
(SHEET 2 OF 5)

TATA CONSULTING ENGINEERS LIMITED
MUMBAI

SCALE : NTS	DWG NO. TCE.12503A-CV-3082-WS-34360	ISSUE P0
DC & DISC: DEL-CV		

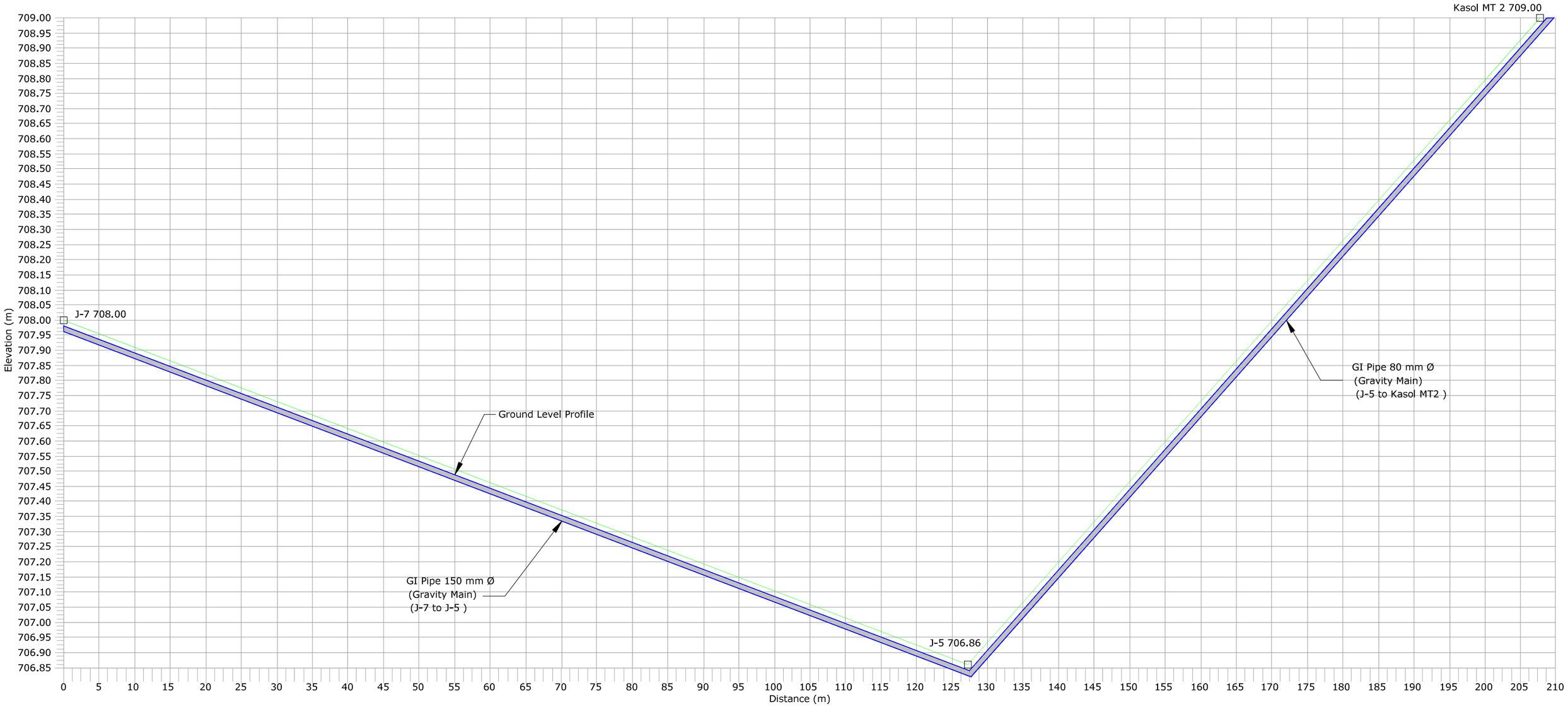

Legend :-

1. Ground Level
2. Rising Main
3. Junction
4. Air Valve
5. Scour Valve

Note:-

1 - Air Valves are Considered to be provided at 500 m c/c and at High Points.
2 - Scour Valves are Provided at 2000 m c/c Distance.
3 - Above is Tentative Arrangement. Based on Actual Site Condition size, Quantity and Location of Proposed Valves May Vary.

	SIGN.													
	INITIALS													
	REVISIONS													
P0	SIGN.													22-06-2022
	INITIALS	BSN	ES	DVB							MK	DK		
	REVISIONS													
ISSUE		DRN	DSN	CHD	CV	EL	IC	ME			PE/PM	APPD	DATE (dd-mm-yyyy)	
					CLEARED									

'P' (PRELIMINARY) ISSUES ARE NOT TO BE USED FOR CONSTRUCTION / FABRICATION BUT ARE ISSUED FOR LIMITED PURPOSES ONLY AS INDICATED IN THE SMALL BLOCK ABOVE THIS BLOCK.

CONSTRUCTION / FABRICATION WORK IS PERMITTED ON 'R' (RELEASED) ISSUES ONLY.

INFORMATION CONTAINED WITHIN 'HOLD' IS NOT RELEASED FOR CONSTUCTION / FABRICATION. FIELD MUST GET DESIGN OFFICE TO CLEAR 'HOLDS' IN TIME BEFORE PROCEEDING WITH ANY CONSTRUCTION/ FABRICATION WORK RELATED TO 'HOLDS'.

SIGN. OF CLIENT:-

JE	AE	EE	SE

PURPOSE : FOR TENDER ONLY

DO NOT SCALE

Proprietary Notice and Version Control This document contains confidential information for use only by the " Client " ; for the Project under consideration, which is provided for the sole purpose of permitting the recipient to evaluate the information submitted herewith. In consideration of receipt of this document; unless agreed to in contrary in the Contract; the recipient agrees to maintain such information in confidence and to not reproduce or otherwise disclose this information to any person outside the recipient's organisation; except that there is no obligation to maintain the confidentiality of any information which was known to the recipient prior to receipt of such information from Tata Consulting Engineers Limited, or becomes publicly known through no fault of recipient, or Tata Consulting Engineers Limited, or is received without obligation of confidentiality from a third party owing no obligation of confidentiality to Tata Consulting Engineers Limited. All information given under this version over rides all and any kind of offers, assumptions, deliverables and contracts submitted verbally (and subsequently communicated in writing) or in writing or otherwise given under any and all previous version/s.

FILE NAME 12503A-CV-34361-Rev-P0

DETAILED DESIGN CONSULTANCY, HP-SHIVA (PACKAGE-CS09)

IRRIGATION, HORTICULTURE, ORCHARDS AND VALUE CHAIN DEVELOPMENT

PROPOSED L-SECTION-LIS KASOL
GHUMARWIN BLOCK, BILASPUR DISTRICT
(SHEET 3 OF 5)

TATA CONSULTING ENGINEERS LIMITED
MUMBAI

SCALE : NTS	DWG NO. TCE.12503A-CV-3082-WS-34361		ISSUE P0
DC & DISC: DEL-CV			

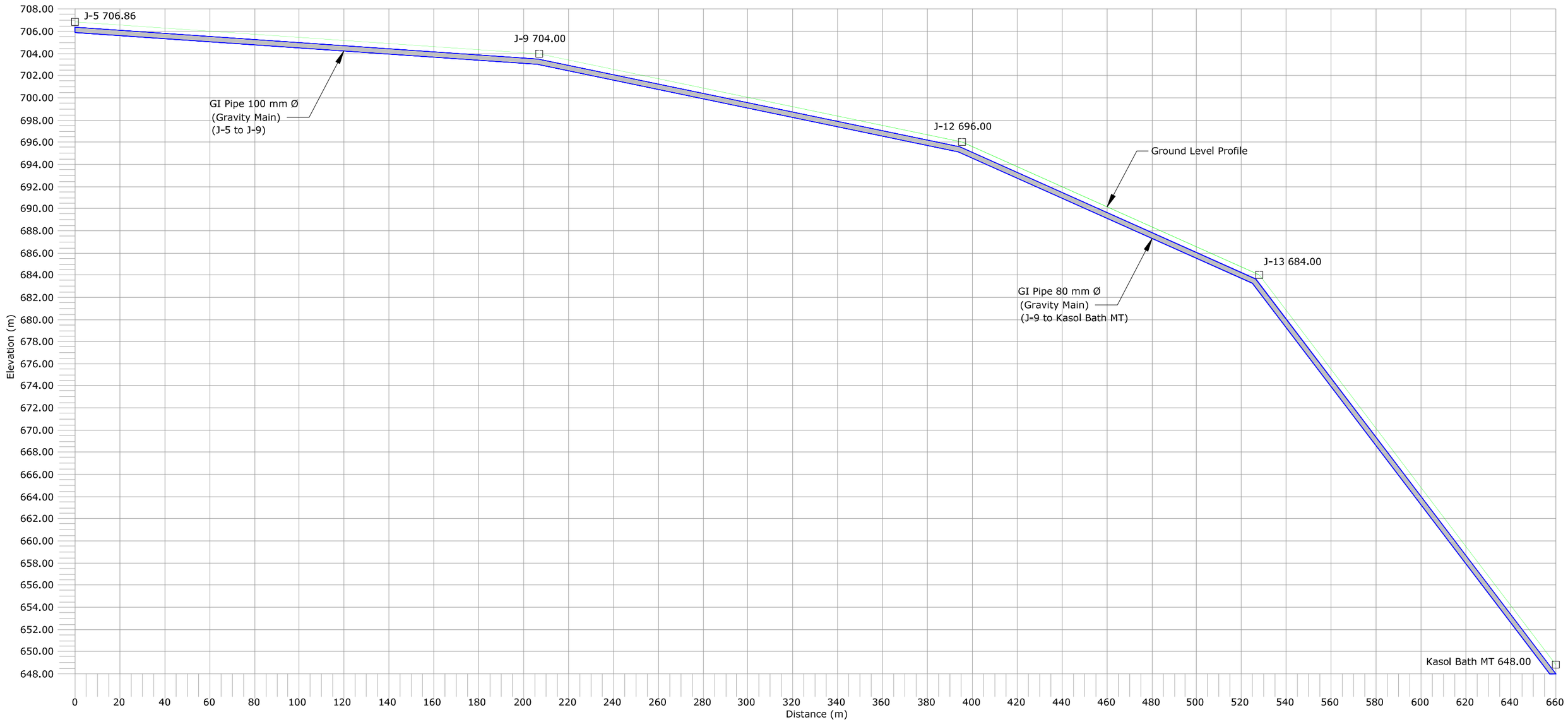

Legend :-

1. Ground Level
2. Rising Main
3. Junction
4. Air Valve
5. Scour Valve

Note:-

1 - Air Valves are Considered to be provided at 500 m c/c and at High Points.
2 - Scour Valves are Provided at 2000 m c/c Distance.
3 - Above is Tentative Arrangement. Based on Actual Site Condition size, Quantity and Location of Proposed Valves May Vary.

	SIGN.													
	INITIALS													
	REVISIONS													
P0	SIGN.													22-06-2022
	INITIALS	BSN	ES	DVB							MK	DK		
	REVISIONS													
ISSUE		DRN	DSN	CHD	CV	EL	IC	ME			PE/PM	APPD	DATE (dd-mm-yyyy)	
					CLEARED									

'P' (PRELIMINARY) ISSUES ARE NOT TO BE USED FOR CONSTRUCTION / FABRICATION BUT ARE ISSUED FOR LIMITED PURPOSES ONLY AS INDICATED IN THE SMALL BLOCK ABOVE THIS BLOCK.

CONSTRUCTION / FABRICATION WORK IS PERMITTED ON 'R' (RELEASED) ISSUES ONLY.

INFORMATION CONTAINED WITHIN 'HOLD' IS NOT RELEASED FOR CONSTUCTION / FABRICATION. FIELD MUST GET DESIGN OFFICE TO CLEAR 'HOLDS' IN TIME BEFORE PROCEEDING WITH ANY CONSTRUCTION/ FABRICATION WORK RELATED TO 'HOLDS'.

SIGN. OF CLIENT:-

JE	AE	EE	SE

PURPOSE : FOR TENDER ONLY

DO NOT SCALE

Proprietary Notice and Version Control This document contains confidential information for use only by the " Client " ; for the Project under consideration, which is provided for the sole purpose of permitting the recipient to evaluate the information submitted herewith. In consideration of receipt of this document; unless agreed to in contrary in the Contract; the recipient agrees to maintain such information in confidence and to not reproduce or otherwise disclose this information to any person outside the recipient's organisation; except that there is no obligation to maintain the confidentiality of any information which was known to the recipient prior to receipt of such information from Tata Consulting Engineers Limited, or becomes publicly known through no fault of recipient, or Tata Consulting Engineers Limited, or is received without obligation of confidentiality from a third party owing no obligation of confidentiality fo Tata Consulting Engineers Limited. All information given under this version over rides all and any kind of offers, assumptions, deliverables and contracts submitted verbally (and subsequently communicated in writing) or in writing or otherwise given under any and all previous version/s.

FILE NAME 12503A-CV-34362-Rev-P0

DETAILED DESIGN CONSULTANCY, HP-SHIVA (PACKAGE-CS09)

IRRIGATION, HORTICULTURE, ORCHARDS AND VALUE CHAIN DEVELOPMENT

PROPOSED L-SECTION-LIS KASOL
GHUMARWIN BLOCK, BILASPUR DISTRICT
(SHEET 4 OF 5)

TATA CONSULTING ENGINEERS LIMITED
MUMBAI

SCALE : NTS	DWG NO. TCE.12503A-CV-3082-WS-34362	ISSUE P0
DC & DISC: DEL-CV		

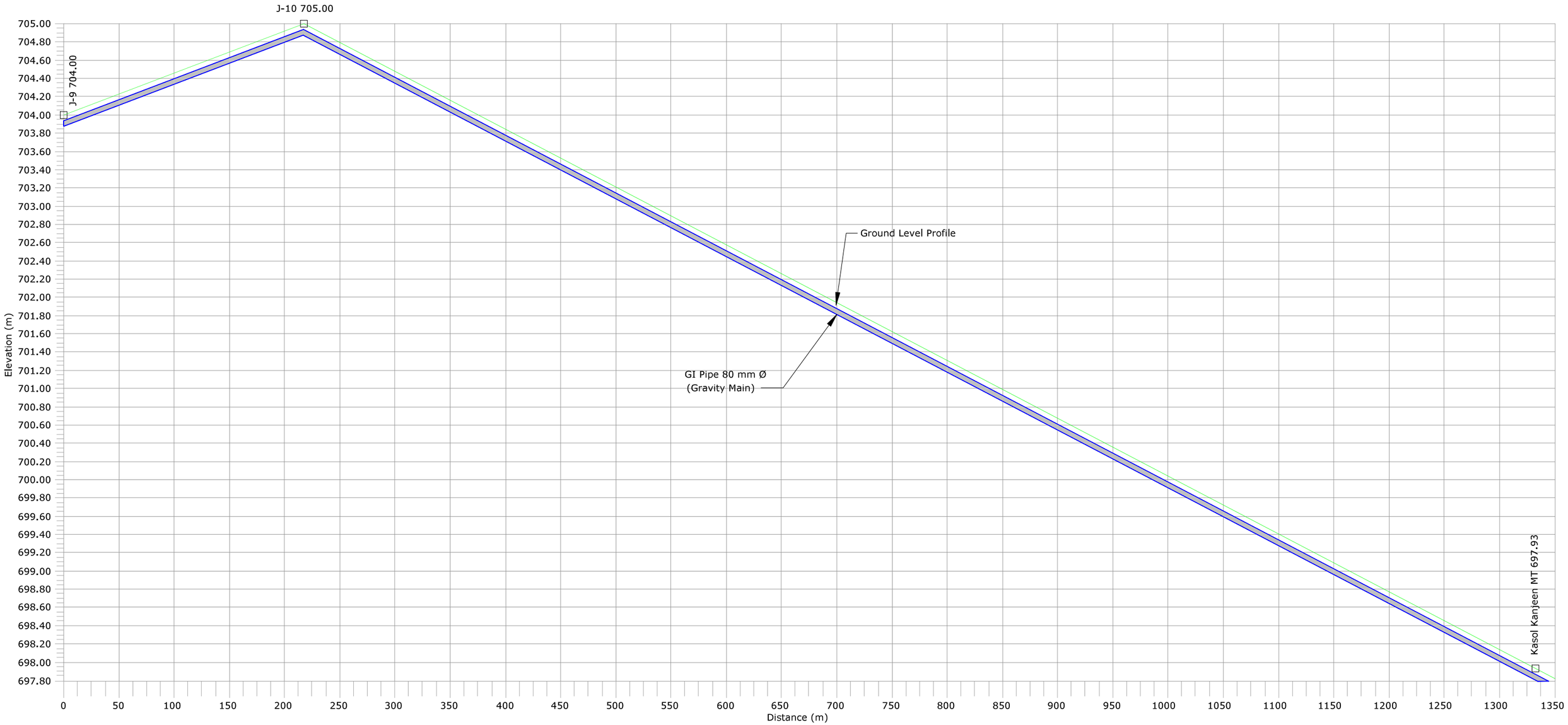

Legend :-

1. Ground Level
2. Rising Main
3. Junction
4. Air Valve
5. Scour Valve

Note:-

1 - Air Valves are Considered to be provided at 500 m c/c and at High Points.
2 - Scour Valves are Provided at 2000 m c/c Distance.
3 - Above is Tentative Arrangement. Based on Actual Site Condition size, Quantity and Location of Proposed Valves May Vary.

	SIGN.												
	INITIALS												
	REVISIONS												
P0	SIGN.												22-06-2022
	INITIALS	BSN	ES	DVB							MK	DK	
	REVISIONS												
ISSUE		DRN	DSN	CHD	CV	EL	IC	ME			PE/PM	APPD	DATE (dd-mm-yyyy)
					CLEARED								

'P' (PRELIMINARY) ISSUES ARE NOT TO BE USED FOR CONSTRUCTION / FABRICATION BUT ARE ISSUED FOR LIMITED PURPOSES ONLY AS INDICATED IN THE SMALL BLOCK ABOVE THIS BLOCK.

CONSTRUCTION / FABRICATION WORK IS PERMITTED ON 'R' (RELEASED) ISSUES ONLY.

INFORMATION CONTAINED WITHIN 'HOLD' IS NOT RELEASED FOR CONSTUCTION / FABRICATION. FIELD MUST GET DESIGN OFFICE TO CLEAR 'HOLDS' IN TIME BEFORE PROCEEDING WITH ANY CONSTRUCTION/ FABRICATION WORK RELATED TO 'HOLDS'.

SIGN. OF CLIENT:-

JE	AE	EE	SE

PURPOSE : FOR TENDER ONLY

DO NOT SCALE

Proprietary Notice and Version Control This document contains confidential information for use only by the " Client " ; for the Project under consideration, which is provided for the sole purpose of permitting the recipient to evaluate the information submitted herewith. In consideration of receipt of this document; unless agreed to in contrary in the Contract; the recipient agrees to maintain such information in confidence and to not reproduce or otherwise disclose this information to any person outside the recipient's organisation; except that there is no obligation to maintain the confidentiality of any information which was known to the recipient prior to receipt of such information from Tata Consulting Engineers Limited, or becomes publicly known through no fault of recipient, or Tata Consulting Engineers Limited, or is received without obligation of confidentiality from a third party owing no obligation of confidentiality to Tata Consulting Engineers Limited. All information given under this version over rides all and any kind of offers, assumptions, deliverables and contracts submitted verbally (and subsequently communicated in writing) or in writing or otherwise given under any and all previous version/s.

FILE NAME 12503A-CV-34363-Rev-P0

DETAILED DESIGN CONSULTANCY, HP-SHIVA (PACKAGE-CS09)

IRRIGATION, HORTICULTURE, ORCHARDS AND VALUE CHAIN DEVELOPMENT

PROPOSED L-SECTION-LIS KASOL
GHUMARWIN BLOCK, BILASPUR DISTRICT
(SHEET 5 OF 5)

TATA CONSULTING ENGINEERS LIMITED
MUMBAI

SCALE : NTS
DC & DISC: DEL-CV

DWG NO. TCE.12503A-CV-3082-WS-34363

ISSUE P0

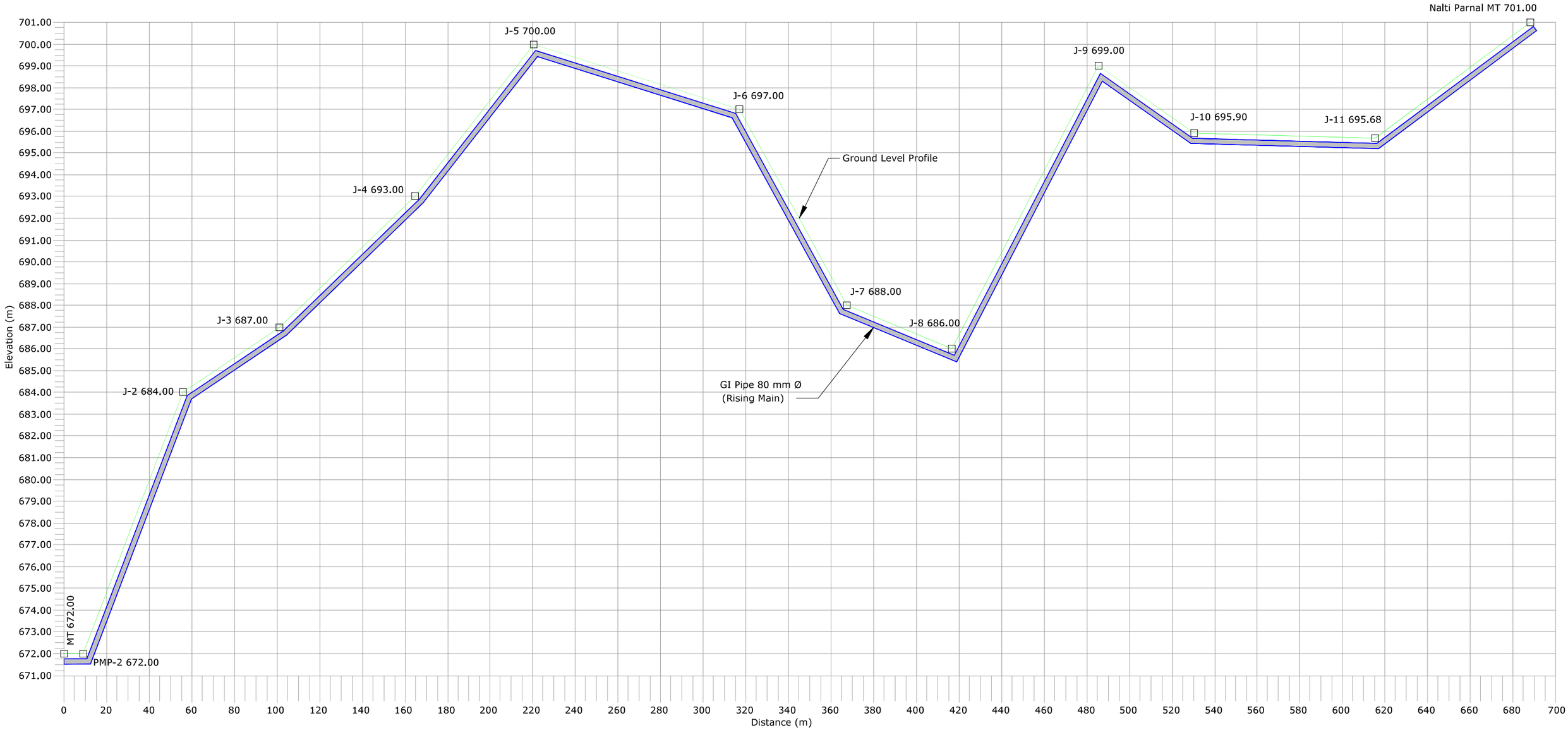

Legend :-

1. Ground Level
2. Rising Main
3. Junction
4. Air Valve
5. Scour Valve

Note:-

1 - Air Valves are Considered to be provided at 500 m c/c and at High Points.
2 - Scour Valves are Provided at 2000 m c/c Distance.
3 - Above is Tentative Arrangement. Based on Actual Site Condition size, Quantity and Location of Proposed Valves May Vary.

	SIGN.													
	INITIALS													
	REVISIONS													
P0	SIGN.													22-06-2022
	INITIALS	BSN	ES	DVB							MK	DK		
	REVISIONS													
ISSUE		DRN	DSN	CHD	CV	EL	IC	ME			PE/PM	APPD	DATE (dd-mm-yyyy)	
					CLEARED									

'P' (PRELIMINARY) ISSUES ARE NOT TO BE USED FOR CONSTRUCTION / FABRICATION BUT ARE ISSUED FOR LIMITED PURPOSES ONLY AS INDICATED IN THE SMALL BLOCK ABOVE THIS BLOCK.

CONSTRUCTION / FABRICATION WORK IS PERMITTED ON 'R' (RELEASED) ISSUES ONLY.

INFORMATION CONTAINED WITHIN 'HOLD' IS NOT RELEASED FOR CONSTUCTION / FABRICATION. FIELD MUST GET DESIGN OFFICE TO CLEAR 'HOLDS' IN TIME BEFORE PROCEEDING WITH ANY CONSTRUCTION/ FABRICATION WORK RELATED TO 'HOLDS'.

SIGN. OF CLIENT:-

JE	AE	EE	SE

PURPOSE : FOR TENDER ONLY

DO NOT SCALE

Proprietary Notice and Version Control This document contains confidential information for use only by the " Client " ; for the Project under consideration, which is provided for the sole purpose of permitting the recipient to evaluate the information submitted herewith. In consideration of receipt of this document; unless agreed to in contrary in the Contract; the recipient agrees to maintain such information in confidence and to not reproduce or otherwise disclose this information to any person outside the recipient's organisation; except that there is no obligation to maintain the confidentiality of any information which was known to the recipient prior to receipt of such information from Tata Consulting Engineers Limited, or becomes publicly known through no fault of recipient, or Tata Consulting Engineers Limited, or is received without obligation of confidentiality from a third party owing no obligation of confidentiality to Tata Consulting Engineers Limited. All information given under this version over rides all and any kind of offers, assumptions, deliverables and contracts submitted verbally (and subsequently communicated in writing) or in writing or otherwise given under any and all previous version/s.

FILE NAME 12503A-CV-34364-Rev-P0

DETAILED DESIGN CONSULTANCY, HP-SHIVA (PACKAGE-CS09)

IRRIGATION, HORTICULTURE, ORCHARDS AND VALUE CHAIN DEVELOPMENT

PROPOSED L-SECTION-LIS NALTI PARNAL
GHUMARWIN BLOCK, BILASPUR DISTRICT

TATA CONSULTING ENGINEERS LIMITED
MUMBAI

SCALE : NTS	DWG NO. TCE.12503A-CV-3082-WS-34364		ISSUE P0
DC & DISC: DEL-CV			

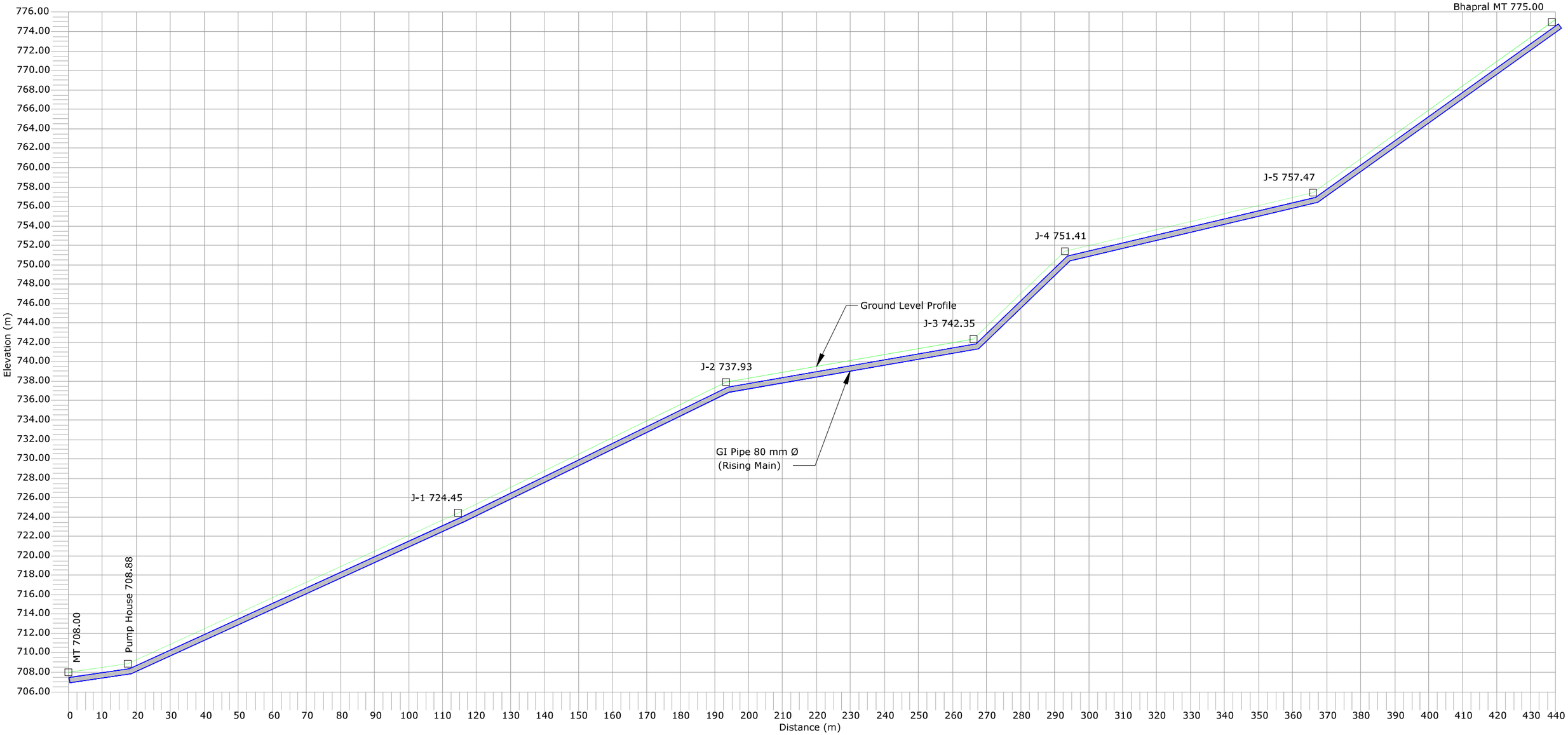

Legend :-

1. Ground Level
2. Rising Main
3. Junction
4. Air Valve
5. Scour Valve

Note:-

1 - Air Valves are Considered to be provided at 500 m c/c and at High Points.
2 - Scour Valves are Provided at 2000 m c/c Distance.
3 - Above is Tentative Arrangement. Based on Actual Site Condition size, Quantity and Location of Proposed Valves May Vary.

	SIGN.													
	INITIALS													
	REVISIONS													
P0	SIGN.													22-06-2022
	INITIALS	BSN	ES	DVB							MK	DK		
	REVISIONS													
ISSUE		DRN	DSN	CHD	CV	EL	IC	ME			PE/PM	APPD	DATE (dd-mm-yyyy)	
					CLEARED									

'P' (PRELIMINARY) ISSUES ARE NOT TO BE USED FOR CONSTRUCTION / FABRICATION BUT ARE ISSUED FOR LIMITED PURPOSES ONLY AS INDICATED IN THE SMALL BLOCK ABOVE THIS BLOCK.

CONSTRUCTION / FABRICATION WORK IS PERMITTED ON 'R' (RELEASED) ISSUES ONLY.

INFORMATION CONTAINED WITHIN 'HOLD' IS NOT RELEASED FOR CONSTUCTION / FABRICATION. FIELD MUST GET DESIGN OFFICE TO CLEAR 'HOLDS' IN TIME BEFORE PROCEEDING WITH ANY CONSTRUCTION/ FABRICATION WORK RELATED TO 'HOLDS'.

SIGN. OF CLIENT:–

JE	AE	EE	SE

PURPOSE : FOR TENDER ONLY

DO NOT SCALE

Proprietary Notice and Version Control This document contains confidential information for use only by the " Client " ; for the Project under consideration, which is provided for the sole purpose of permitting the recipient to evaluate the information submitted herewith. In consideration of receipt of this document; unless agreed to in contrary in the Contract; the recipient agrees to maintain such information in confidence and to not reproduce or otherwise disclose this information to any person outside the recipient's organisation; except that there is no obligation to maintain the confidentiality of any information which was known to the recipient prior to receipt of such information from Tata Consulting Engineers Limited, or becomes publicly known through no fault of recipient, or Tata Consulting Engineers Limited, or is received without obligation of confidentiality from a third party owing no obligation of confidentiality to Tata Consulting Engineers Limited. All information given under this version over rides all and any kind of offers, assumptions, deliverables and contracts submitted verbally (and subsequently communicated in writing) or in writing or otherwise given under any and all previous version/s.

FILE NAME 12503A–CV–34365–Rev–P0

DETAILED DESIGN CONSULTANCY, HP–SHIVA (PACKAGE–CS09)

IRRIGATION, HORTICULTURE, ORCHARDS AND VALUE CHAIN DEVELOPMENT

PROPOSED L–SECTION–LIS BHAPRAL

GHUMARWIN BLOCK, BILASPUR DISTRICT

TATA CONSULTING ENGINEERS LIMITED

MUMBAI

SCALE : NTS	DWG NO. TCE.12503A–CV–3082–WS–34365		ISSUE P0
DC & DISC: DEL–CV			

Legend :-

1. Ground Level
2. Rising Main
3. Junction
4. Air Valve
5. Scour Valve

Note:-

1 - Air Valves are Considered to be provided at 500 m c/c and at High Points.
2 - Scour Valves are Provided at 2000 m c/c Distance.
3 - Above is Tentative Arrangement. Based on Actual Site Condition size, Quantity and Location of Proposed Valves May Vary.

	SIGN.													
	INITIALS													
	REVISIONS													
P0	SIGN.													22-06-2022
	INITIALS	BSN	ES	DVB							MK	DK		
	REVISIONS													
ISSUE		DRN	DSN	CHD	CV	EL	IC	ME			PE/PM	APPD	DATE (dd-mm-yyyy)	
					CLEARED									

'P' (PRELIMINARY) ISSUES ARE NOT TO BE USED FOR CONSTRUCTION / FABRICATION BUT ARE ISSUED FOR LIMITED PURPOSES ONLY AS INDICATED IN THE SMALL BLOCK ABOVE THIS BLOCK.

CONSTRUCTION / FABRICATION WORK IS PERMITTED ON 'R' (RELEASED) ISSUES ONLY.

INFORMATION CONTAINED WITHIN 'HOLD' IS NOT RELEASED FOR CONSTUCTION / FABRICATION. FIELD MUST GET DESIGN OFFICE TO CLEAR 'HOLDS' IN TIME BEFORE PROCEEDING WITH ANY CONSTRUCTION/ FABRICATION WORK RELATED TO 'HOLDS'.

SIGN. OF CLIENT:-

JE	AE	EE	SE

PURPOSE : FOR TENDER ONLY

DO NOT SCALE

Proprietary Notice and Version Control This document contains confidential information for use only by the " Client " ; for the Project under consideration, which is provided for the sole purpose of permitting the recipient to evaluate the information submitted herewith. In consideration of receipt of this document; unless agreed to in contrary in the Contract; the recipient agrees to maintain such information in confidence and to not reproduce or otherwise disclose this information to any person outside the recipient's organisation; except that there is no obligation to maintain the confidentiality of any information which was known to the recipient prior to receipt of such information from Tata Consulting Engineers Limited, or becomes publicly known through no fault of recipient, or Tata Consulting Engineers Limited, or is received without obligation of confidentiality from a third party owing no obligation of confidentiality to Tata Consulting Engineers Limited. All information given under this version over rides all and any kind of offers, assumptions, deliverables and contracts submitted verbally (and subsequently communicated in writing) or in writing or otherwise given under any and all previous version/s.

FILE NAME 12503A-CV-34366-Rev-P0

DETAILED DESIGN CONSULTANCY, HP-SHIVA (PACKAGE-CS09)

IRRIGATION, HORTICULTURE, ORCHARDS AND VALUE CHAIN DEVELOPMENT

PROPOSED L-SECTION-LIS BHADROG

GHUMARWIN BLOCK, BILASPUR DISTRICT

TATA CONSULTING ENGINEERS LIMITED

MUMBAI

SCALE : NTS

DC & DISC: DEL-CV

DWG NO. TCE.12503A-CV-3082-WS-34366

ISSUE P0

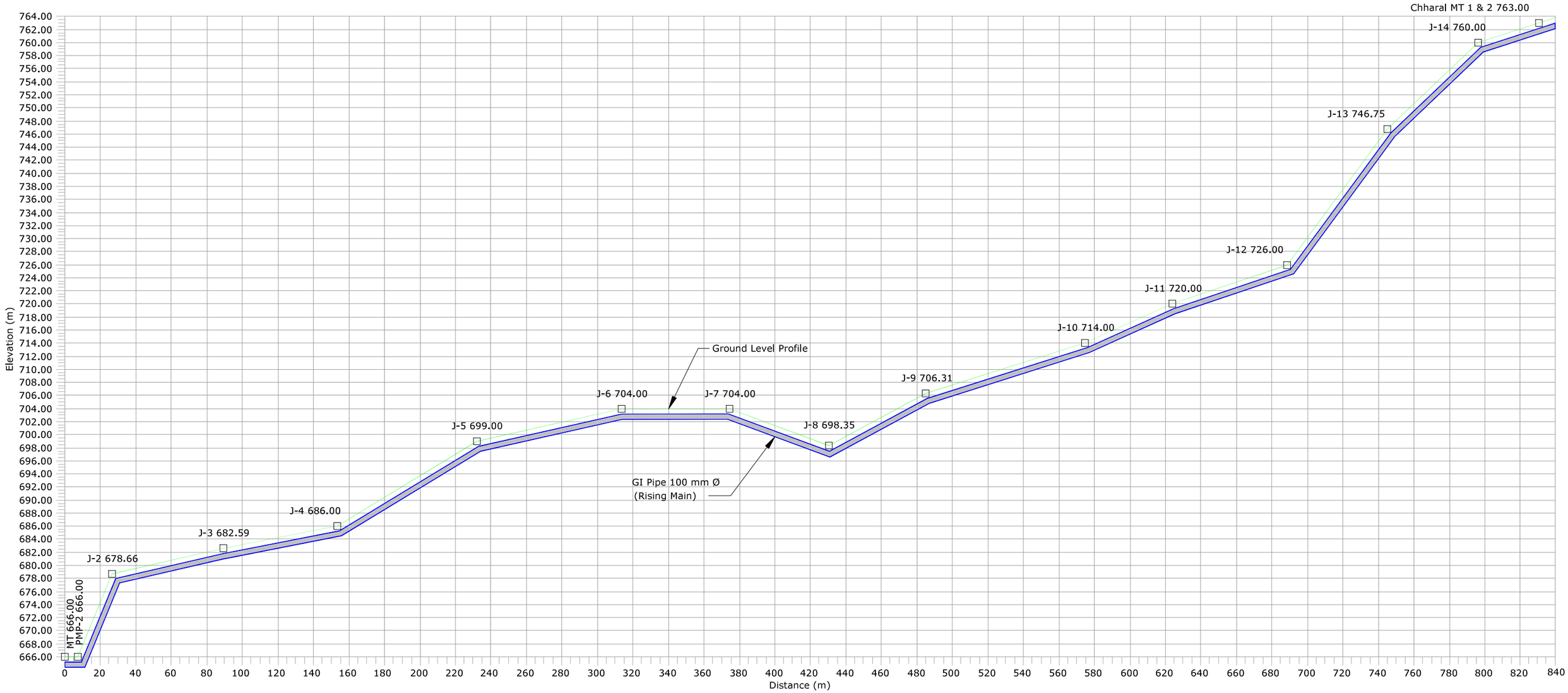

Legend :-

1. Ground Level
2. Rising Main
3. Junction
4. Air Valve
5. Scour Valve

Note:-

1 - Air Valves are Considered to be provided at 500 m c/c and at High Points.
2 - Scour Valves are Provided at 2000 m c/c Distance.
3 - Above is Tentative Arrangement. Based on Actual Site Condition size, Quantity and Location of Proposed Valves May Vary.

	SIGN.													
	INITIALS													
	REVISIONS													
P0	SIGN.													22-06-2022
	INITIALS	BSN	ES	DVB							MK	DK		
	REVISIONS													
ISSUE		DRN	DSN	CHD	CV	EL	IC	ME			PE/PM	APPD	DATE (dd-mm-yyyy)	
					CLEARED									

'P' (PRELIMINARY) ISSUES ARE NOT TO BE USED FOR CONSTRUCTION / FABRICATION BUT ARE ISSUED FOR LIMITED PURPOSES ONLY AS INDICATED IN THE SMALL BLOCK ABOVE THIS BLOCK.

CONSTRUCTION / FABRICATION WORK IS PERMITTED ON 'R' (RELEASED) ISSUES ONLY.

INFORMATION CONTAINED WITHIN 'HOLD' IS NOT RELEASED FOR CONSTUCTION / FABRICATION. FIELD MUST GET DESIGN OFFICE TO CLEAR 'HOLDS' IN TIME BEFORE PROCEEDING WITH ANY CONSTRUCTION/ FABRICATION WORK RELATED TO 'HOLDS'.

SIGN. OF CLIENT:–

JE	AE	EE	SE

PURPOSE : FOR TENDER ONLY

DO NOT SCALE

Proprietary Notice and Version Control This document contains confidential information for use only by the " Client " ; for the Project under consideration, which is provided for the sole purpose of permitting the recipient to evaluate the information submitted herewith. In consideration of receipt of this document; unless agreed to in contrary in the Contract; the recipient agrees to maintain such information in confidence and to not reproduce or otherwise disclose this information to any person outside the recipient's organisation; except that there is no obligation to maintain the confidentiality of any information which was known to the recipient prior to receipt of such information from Tata Consulting Engineers Limited, or becomes publicly known through no fault of recipient, or Tata Consulting Engineers Limited, or is received without obligation of confidentiality from a third party owing no obligation of confidentiality to Tata Consulting Engineers Limited. All information given under this version over rides all and any kind of offers, assumptions, deliverables and contracts submitted verbally (and subsequently communicated in writing) or in writing or otherwise given under any and all previous version/s.

FILE NAME 12503A–CV–34367–Rev–P0

DETAILED DESIGN CONSULTANCY, HP–SHIVA (PACKAGE–CS09)

IRRIGATION, HORTICULTURE, ORCHARDS AND VALUE CHAIN DEVELOPMENT

PROPOSED L–SECTION–LIS CHHARAL

GHUMARWIN BLOCK, BILASPUR DISTRICT

TATA CONSULTING ENGINEERS LIMITED

MUMBAI

SCALE : NTS	DWG NO. TCE.12503A–CV–3082–WS–34367	ISSUE P0
DC & DISC: DEL–CV		

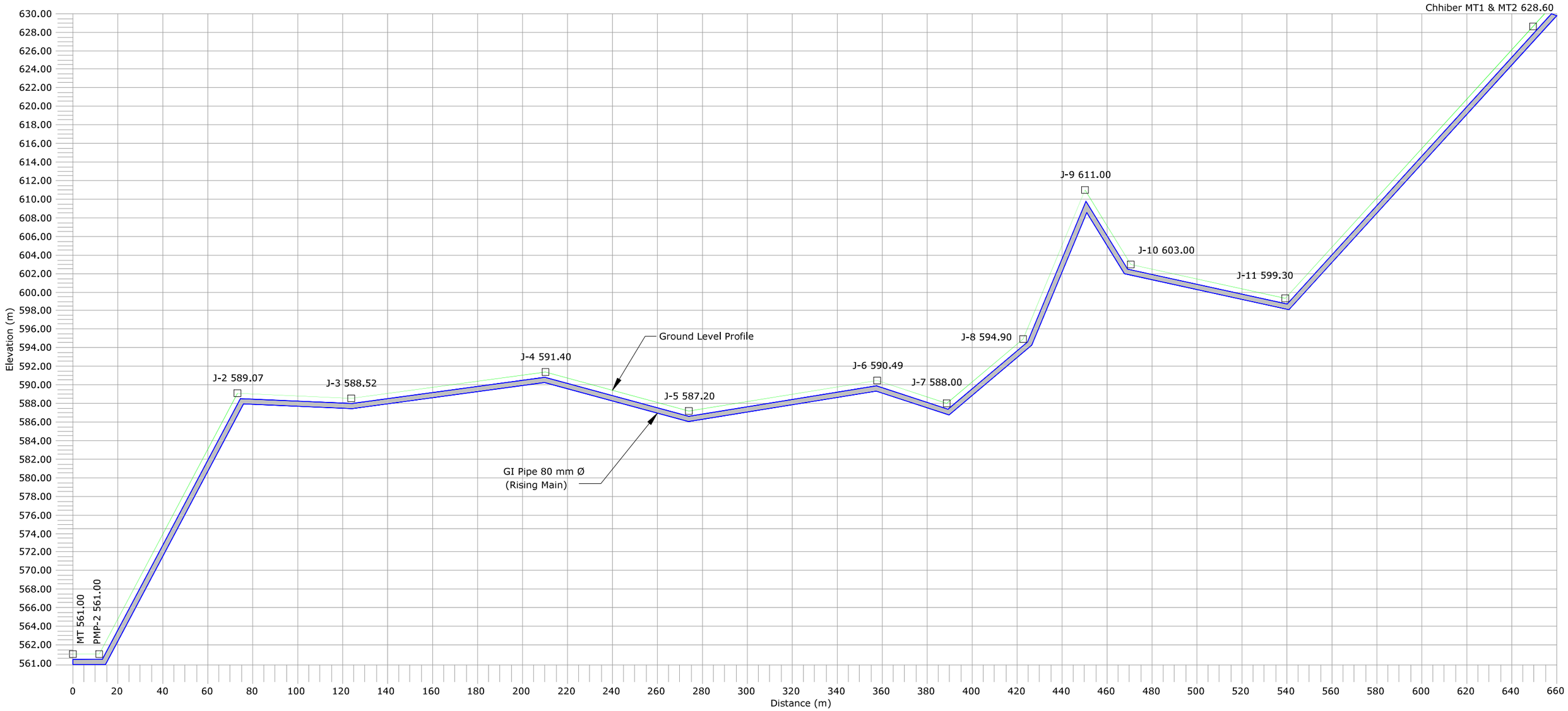

Legend :-

1. Ground Level
2. Rising Main
3. Junction
4. Air Valve
5. Scour Valve

Note:-

1 - Air Valves are Considered to be provided at 500 m c/c and at High Points.
2 - Scour Valves are Provided at 2000 m c/c Distance.
3 - Above is Tentative Arrangement. Based on Actual Site Condition size, Quantity and Location of Proposed Valves May Vary.

	SIGN.													
	INITIALS													
	REVISIONS													
P0	SIGN.													22-06-2022
	INITIALS	BSN	ES	DVB							MK	DK		
	REVISIONS													
ISSUE		DRN	DSN	CHD	CV	EL	IC	ME			PE/PM	APPD	DATE (dd-mm-yyyy)	
					CLEARED									

'P' (PRELIMINARY) ISSUES ARE NOT TO BE USED FOR CONSTRUCTION / FABRICATION BUT ARE ISSUED FOR LIMITED PURPOSES ONLY AS INDICATED IN THE SMALL BLOCK ABOVE THIS BLOCK.

CONSTRUCTION / FABRICATION WORK IS PERMITTED ON 'R' (RELEASED) ISSUES ONLY.

INFORMATION CONTAINED WITHIN 'HOLD' IS NOT RELEASED FOR CONSTUCTION / FABRICATION. FIELD MUST GET DESIGN OFFICE TO CLEAR 'HOLDS' IN TIME BEFORE PROCEEDING WITH ANY CONSTRUCTION/ FABRICATION WORK RELATED TO 'HOLDS'.

SIGN. OF CLIENT:–

JE	AE	EE	SE

PURPOSE : FOR TENDER ONLY

DO NOT SCALE

Proprietary Notice and Version Control This document contains confidential information for use only by the " Client " ; for the Project under consideration, which is provided for the sole purpose of permitting the recipient to evaluate the information submitted herewith. In consideration of receipt of this document; unless agreed to in contrary in the Contract; the recipient agrees to maintain such information in confidence and to not reproduce or otherwise disclose this information to any person outside the recipient's organisation; except that there is no obligation to maintain the confidentiality of any information which was known to the recipient prior to receipt of such information from Tata Consulting Engineers Limited, or becomes publicly known through no fault of recipient, or Tata Consulting Engineers Limited, or is received without obligation of confidentiality from a third party owing no obligation of confidentiality to Tata Consulting Engineers Limited. All information given under this version over rides all and any kind of offers, assumptions, deliverables and contracts submitted verbally (and subsequently communicated in writing) or in writing or otherwise given under any and all previous version/s.

FILE NAME 12503A–CV–34368–Rev–P0

DETAILED DESIGN CONSULTANCY, HP–SHIVA (PACKAGE–CS09)

IRRIGATION, HORTICULTURE, ORCHARDS AND VALUE CHAIN DEVELOPMENT

PROPOSED L–SECTION–LIS CHHIBER

GHUMARWIN BLOCK, BILASPUR DISTRICT

TATA CONSULTING ENGINEERS LIMITED

MUMBAI

SCALE : NTS	DWG NO. TCE.12503A–CV –3082–WS–34368	ISSUE P0
DC & DISC: DEL–CV		

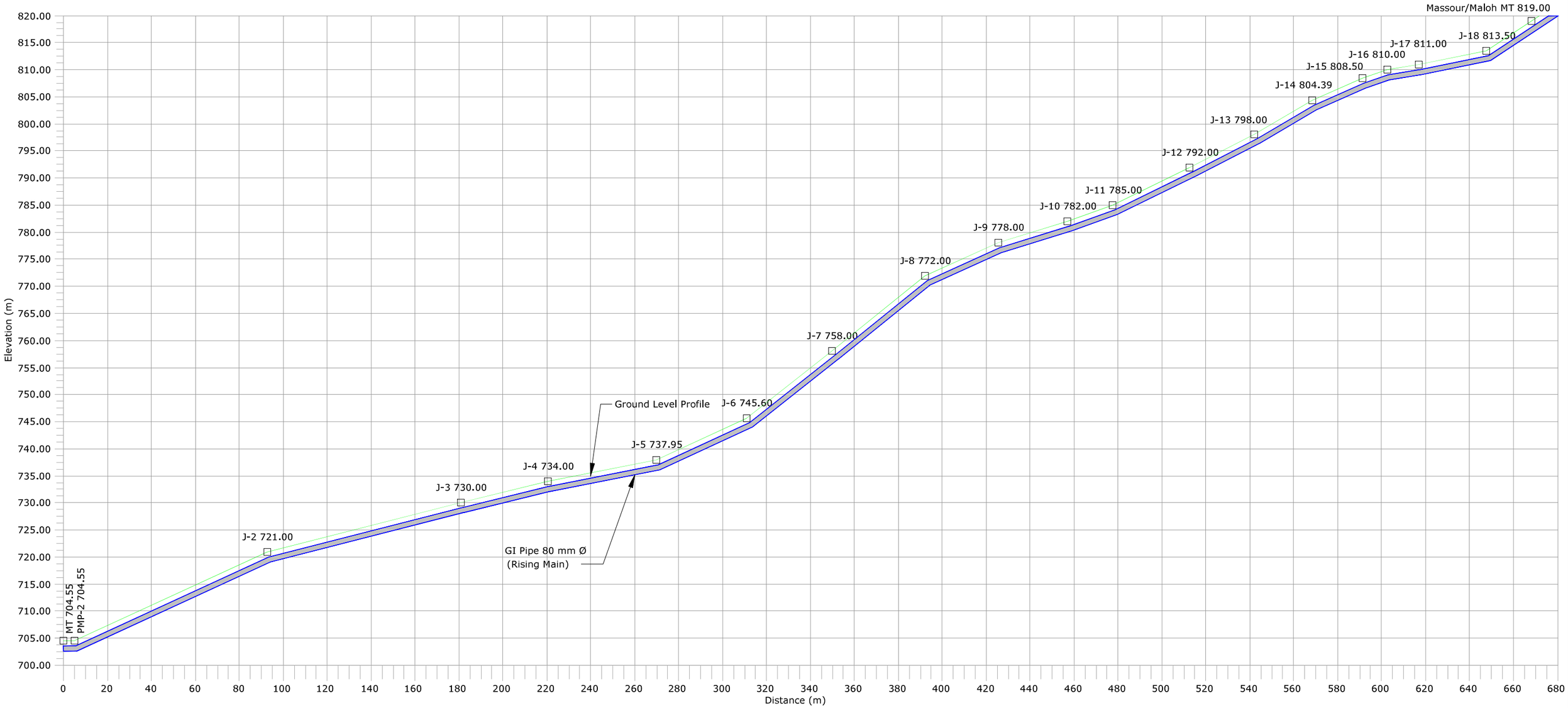

Legend :-

1. Ground Level
2. Rising Main
3. Junction
4. Air Valve
5. Scour Valve

Note:-

1 - Air Valves are Considered to be provided at 500 m c/c and at High Points.
2 - Scour Valves are Provided at 2000 m c/c Distance.
3 - Above is Tentative Arrangement. Based on Actual Site Condition size, Quantity and Location of Proposed Valves May Vary.

	SIGN.													
	INITIALS													
	REVISIONS													
P0	SIGN.													22-06-2022
	INITIALS	BSN	ES	DVB								MK	DK	
	REVISIONS													
ISSUE		DRN	DSN	CHD	CV	EL	IC	ME				PE/PM	APPD	DATE (dd-mm-yyyy)
					CLEARED									

'P' (PRELIMINARY) ISSUES ARE NOT TO BE USED FOR CONSTRUCTION / FABRICATION BUT ARE ISSUED FOR LIMITED PURPOSES ONLY AS INDICATED IN THE SMALL BLOCK ABOVE THIS BLOCK.

CONSTRUCTION / FABRICATION WORK IS PERMITTED ON 'R' (RELEASED) ISSUES ONLY.

INFORMATION CONTAINED WITHIN 'HOLD' IS NOT RELEASED FOR CONSTUCTION / FABRICATION. FIELD MUST GET DESIGN OFFICE TO CLEAR 'HOLDS' IN TIME BEFORE PROCEEDING WITH ANY CONSTRUCTION/ FABRICATION WORK RELATED TO 'HOLDS'.

SIGN. OF CLIENT:-

JE	AE	EE	SE

PURPOSE : FOR TENDER ONLY

DO NOT SCALE

Proprietary Notice and Version Control This document contains confidential information for use only by the " Client " ; for the Project under consideration, which is provided for the sole purpose of permitting the recipient to evaluate the information submitted herewith. In consideration of receipt of this document; unless agreed to in contrary in the Contract; the recipient agrees to maintain such information in confidence and to not reproduce or otherwise disclose this information to any person outside the recipient's organisation; except that there is no obligation to maintain the confidentiality of any information which was known to the recipient prior to receipt of such information from Tata Consulting Engineers Limited, or becomes publicly known through no fault of recipient, or Tata Consulting Engineers Limited, or is received without obligation of confidentiality from a third party owing no obligation of confidentiality to Tata Consulting Engineers Limited. All information given under this version over rides all and any kind of offers, assumptions, deliverables and contracts submitted verbally (and subsequently communicated in writing) or in writing or otherwise given under any and all previous version/s.

FILE NAME 12503A-CV-34369-Rev-P0

DETAILED DESIGN CONSULTANCY, HP-SHIVA (PACKAGE-CS09)

IRRIGATION, HORTICULTURE, ORCHARDS AND VALUE CHAIN DEVELOPMENT

PROPOSED L-SECTION-LIS MASSOUR/MALLOH

GHUMARWIN BLOCK, BILASPUR DISTRICT

TATA CONSULTING ENGINEERS LIMITED

MUMBAI

SCALE : NTS	DWG NO. TCE.12503A-CV-3082-WS-34369		ISSUE P0
DC & DISC: DEL-CV			

Legend :-

1. Ground Level
2. Rising Main
3. Junction
4. Air Valve
5. Scour Valve

Note:-

1 - Air Valves are Considered to be provided at 500 m c/c and at High Points.
2 - Scour Valves are Provided at 2000 m c/c Distance.
3 - Above is Tentative Arrangement. Based on Actual Site Condition size, Quantity and Location of Proposed Valves May Vary.

	SIGN.													
	INITIALS													
	REVISIONS													
	SIGN.													
P0	INITIALS	BSN	ES	DVB							MK	DK	22-06-2022	
	REVISIONS													
ISSUE		DRN	DSN	CHD	CV	EL	IC	ME			PE/PM	APPD	DATE (dd-mm-yyyy)	
					CLEARED									

'P' (PRELIMINARY) ISSUES ARE NOT TO BE USED FOR CONSTRUCTION / FABRICATION BUT ARE ISSUED FOR LIMITED PURPOSES ONLY AS INDICATED IN THE SMALL BLOCK ABOVE THIS BLOCK.

CONSTRUCTION / FABRICATION WORK IS PERMITTED ON 'R' (RELEASED) ISSUES ONLY.

INFORMATION CONTAINED WITHIN 'HOLD' IS NOT RELEASED FOR CONSTUCTION / FABRICATION. FIELD MUST GET DESIGN OFFICE TO CLEAR 'HOLDS' IN TIME BEFORE PROCEEDING WITH ANY CONSTRUCTION/ FABRICATION WORK RELATED TO 'HOLDS'.

SIGN. OF CLIENT:-

JE	AE	EE	SE

PURPOSE : FOR TENDER ONLY

DO NOT SCALE

Proprietary Notice and Version Control This document contains confidential information for use only by the " Client " ; for the Project under consideration, which is provided for the sole purpose of permitting the recipient to evaluate the information submitted herewith. In consideration of receipt of this document; unless agreed to in contrary in the Contract; the recipient agrees to maintain such information in confidence and to not reproduce or otherwise disclose this information to any person outside the recipient's organisation; except that there is no obligation to maintain the confidentiality of any information which was known to the recipient prior to receipt of such information from Tata Consulting Engineers Limited, or becomes publicly known through no fault of recipient, or Tata Consulting Engineers Limited, or is received without obligation of confidentiality from a third party owing no obligation of confidentiality to Tata Consulting Engineers Limited. All information given under this version over rides all and any kind of offers, assumptions, deliverables and contracts submitted verbally (and subsequently communicated in writing) or in writing or otherwise given under any and all previous version/s.

FILE NAME 12503A-CV-34370-Rev-P0

DETAILED DESIGN CONSULTANCY, HP-SHIVA (PACKAGE-CS09)

IRRIGATION, HORTICULTURE, ORCHARDS AND VALUE CHAIN DEVELOPMENT

PROPOSED L-SECTION-LIS SANDHIHAR
GHUMARWIN BLOCK, BILASPUR DISTRICT
(SHEET 1 OF 2)

TATA CONSULTING ENGINEERS LIMITED
MUMBAI

SCALE : NTS	DWG NO. TCE.12503A-CV-3082-WS-34370	ISSUE P0
DC & DISC: DEL-CV		

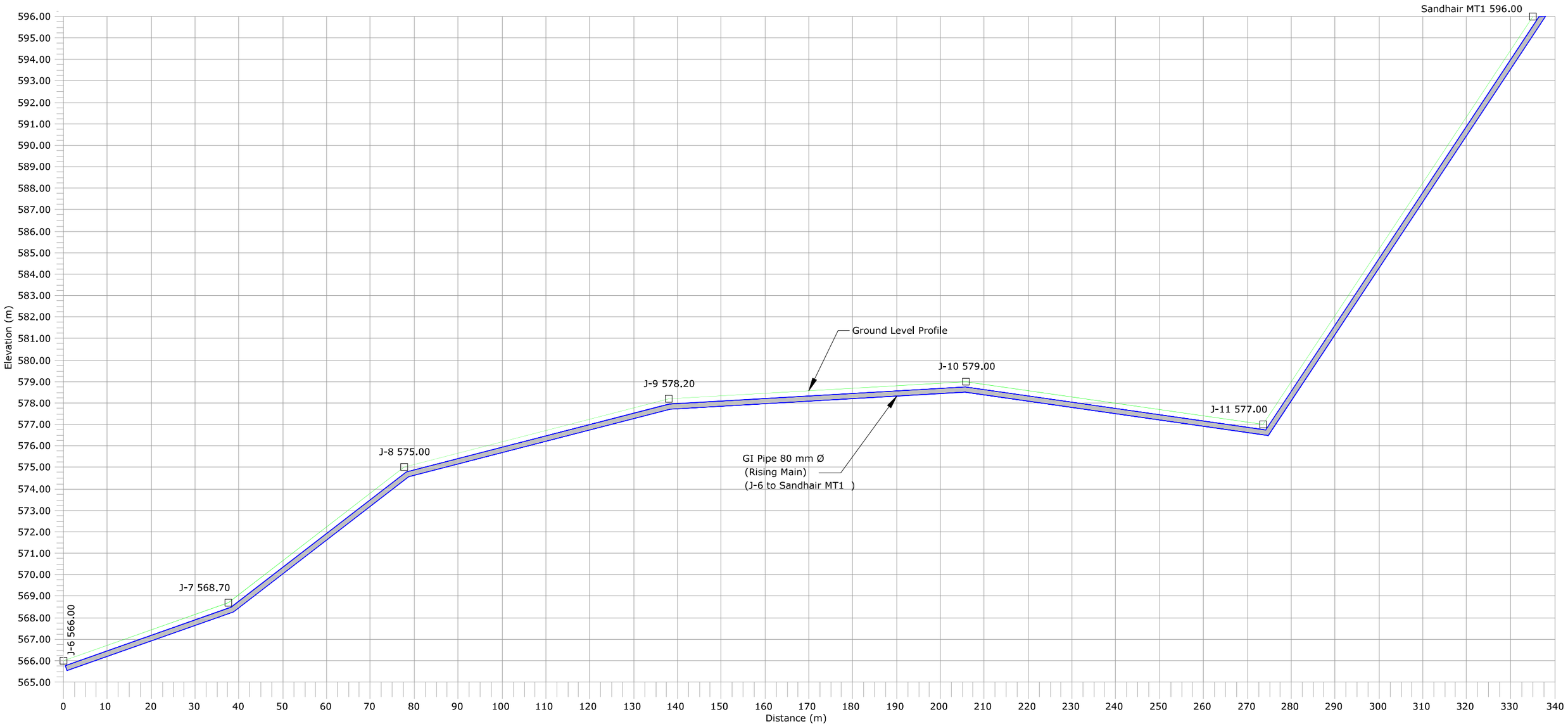

Legend :-

1. Ground Level
2. Rising Main
3. Junction
4. Air Valve
5. Scour Valve

Note:-

1 - Air Valves are Considered to be provided at 500 m c/c and at High Points.
2 - Scour Valves are Provided at 2000 m c/c Distance.
3 - Above is Tentative Arrangement. Based on Actual Site Condition size, Quantity and Location of Proposed Valves May Vary.

	SIGN.												
	INITIALS												
	REVISIONS												
P0	SIGN.												22-06-2022
	INITIALS	BSN	ES	DVB							MK	DK	
	REVISIONS												
ISSUE		DRN	DSN	CHD	CV	EL	IC	ME			PE/PM	APPD	DATE (dd-mm-yyyy)
					CLEARED								

'P' (PRELIMINARY) ISSUES ARE NOT TO BE USED FOR CONSTRUCTION / FABRICATION BUT ARE ISSUED FOR LIMITED PURPOSES ONLY AS INDICATED IN THE SMALL BLOCK ABOVE THIS BLOCK.

CONSTRUCTION / FABRICATION WORK IS PERMITTED ON 'R' (RELEASED) ISSUES ONLY.

INFORMATION CONTAINED WITHIN 'HOLD' IS NOT RELEASED FOR CONSTUCTION / FABRICATION. FIELD MUST GET DESIGN OFFICE TO CLEAR 'HOLDS' IN TIME BEFORE PROCEEDING WITH ANY CONSTRUCTION/ FABRICATION WORK RELATED TO 'HOLDS'.

SIGN. OF CLIENT:-

JE	AE	EE	SE

PURPOSE : FOR TENDER ONLY

DO NOT SCALE

Proprietary Notice and Version Control This document contains confidential information for use only by the " Client " ; for the Project under consideration, which is provided for the sole purpose of permitting the recipient to evaluate the information submitted herewith. In consideration of receipt of this document; unless agreed to in contrary in the Contract; the recipient agrees to maintain such information in confidence and to not reproduce or otherwise disclose this information to any person outside the recipient's organisation; except that there is no obligation to maintain the confidentiality of any information which was known to the recipient prior to receipt of such information from Tata Consulting Engineers Limited, or becomes publicly known through no fault of recipient, or Tata Consulting Engineers Limited, or is received without obligation of confidentiality from a third party owing no obligation of confidentiality to Tata Consulting Engineers Limited. All information given under this version over rides all and any kind of offers, assumptions, deliverables and contracts submitted verbally (and subsequently communicated in writing) or in writing or otherwise given under any and all previous version/s.

FILE NAME 12503A-CV-34371-Rev-P0

DETAILED DESIGN CONSULTANCY, HP-SHIVA (PACKAGE-CS09)

IRRIGATION, HORTICULTURE, ORCHARDS AND VALUE CHAIN DEVELOPMENT

PROPOSED L-SECTION-LIS SANDHIHAR
GHUMARWIN BLOCK, BILASPUR DISTRICT
(SHEET 2 OF 2)

TATA CONSULTING ENGINEERS LIMITED
MUMBAI

SCALE : NTS	DWG NO. TCE.12503A-CV-3082-WS-34371		ISSUE P0
DC & DISC: DEL-CV			

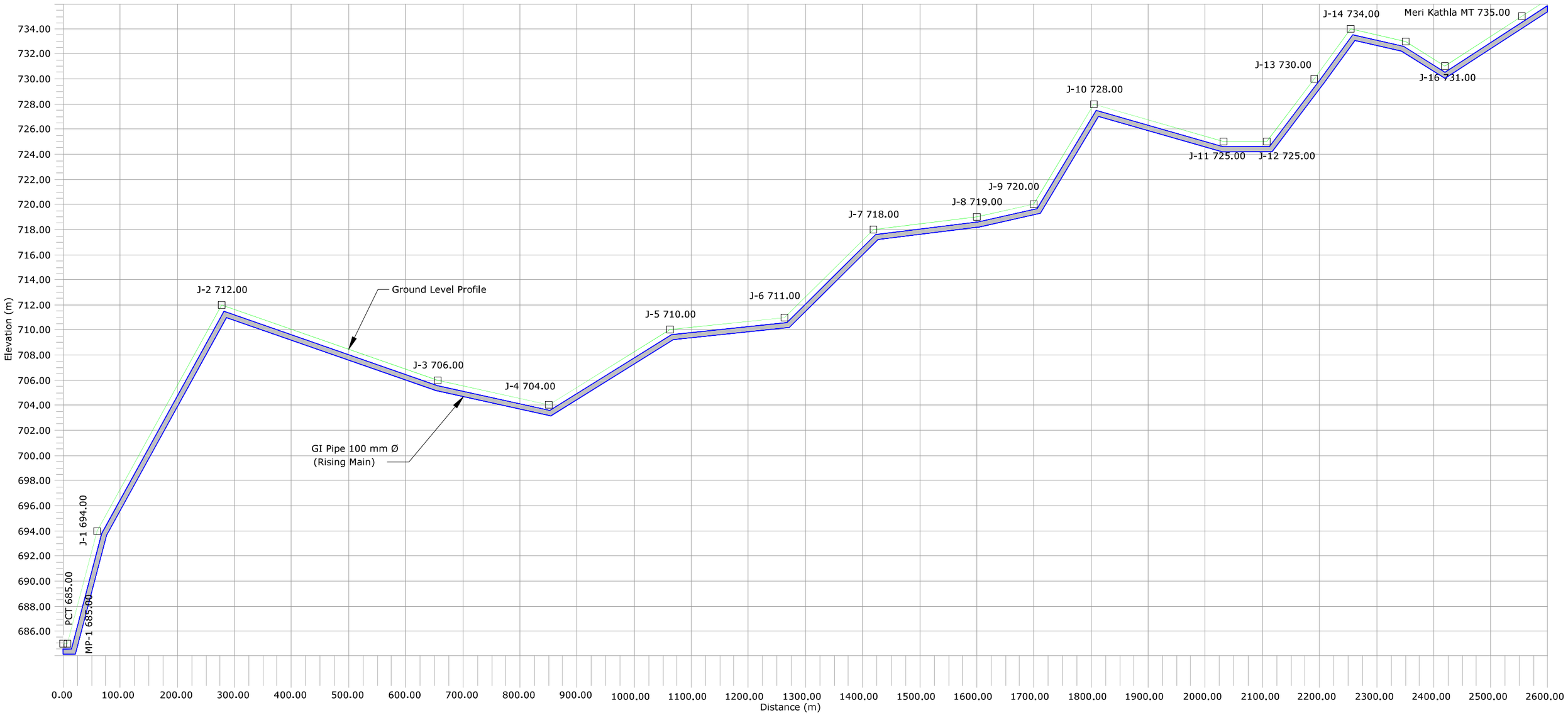

Legend :-

1. Ground Level
2. Rising Main
3. Junction
4. Air Valve
5. Scour Valve

Note:-

1 - Air Valves are Considered to be provided at 500 m c/c and at High Points.
2 - Scour Valves are Provided at 2000 m c/c Distance.
3 - Above is Tentative Arrangement. Based on Actual Site Condition size, Quantity and Location of Proposed Valves May Vary.

	SIGN.													
	INITIALS													
	REVISIONS													
P0	SIGN.													22-06-2022
	INITIALS	BSN	ES	DVB							MK	DK		
	REVISIONS													
ISSUE		DRN	DSN	CHD	CV	EL	IC	ME			PE/PM	APPD	DATE (dd-mm-yyyy)	
					CLEARED									

'P' (PRELIMINARY) ISSUES ARE NOT TO BE USED FOR CONSTRUCTION / FABRICATION BUT ARE ISSUED FOR LIMITED PURPOSES ONLY AS INDICATED IN THE SMALL BLOCK ABOVE THIS BLOCK.

CONSTRUCTION / FABRICATION WORK IS PERMITTED ON 'R' (RELEASED) ISSUES ONLY.

INFORMATION CONTAINED WITHIN 'HOLD' IS NOT RELEASED FOR CONSTUCTION / FABRICATION. FIELD MUST GET DESIGN OFFICE TO CLEAR 'HOLDS' IN TIME BEFORE PROCEEDING WITH ANY CONSTRUCTION/ FABRICATION WORK RELATED TO 'HOLDS'.

SIGN. OF CLIENT:–

JE	AE	EE	SE

PURPOSE : FOR TENDER ONLY

DO NOT SCALE

Proprietary Notice and Version Control This document contains confidential information for use only by the " Client " ; for the Project under consideration, which is provided for the sole purpose of permitting the recipient to evaluate the information submitted herewith. In consideration of receipt of this document; unless agreed to in contrary in the Contract; the recipient agrees to maintain such information in confidence and to not reproduce or otherwise disclose this information to any person outside the recipient's organisation; except that there is no obligation to maintain the confidentiality of any information which was known to the recipient prior to receipt of such information from Tata Consulting Engineers Limited, or becomes publicly known through no fault of recipient, or Tata Consulting Engineers Limited, or is received without obligation of confidentiality from a third party owing no obligation of confidentiality to Tata Consulting Engineers Limited. All information given under this version over rides all and any kind of offers, assumptions, deliverables and contracts submitted verbally (and subsequently communicated in writing) or in writing or otherwise given under any and all previous version/s.

FILE NAME 12503A–CV–34372–Rev–P0

DETAILED DESIGN CONSULTANCY, HP–SHIVA (PACKAGE–CS09)

IRRIGATION, HORTICULTURE, ORCHARDS AND VALUE CHAIN DEVELOPMENT

PROPOSED L–SECTION–LIS MERI KATLA

GHUMARWIN BLOCK, BILASPUR DISTRICT

TATA CONSULTING ENGINEERS LIMITED

MUMBAI

SCALE : NTS	DWG NO. TCE.12503A–CV–3082–WS–34372		ISSUE P0
DC & DISC: DEL–CV			

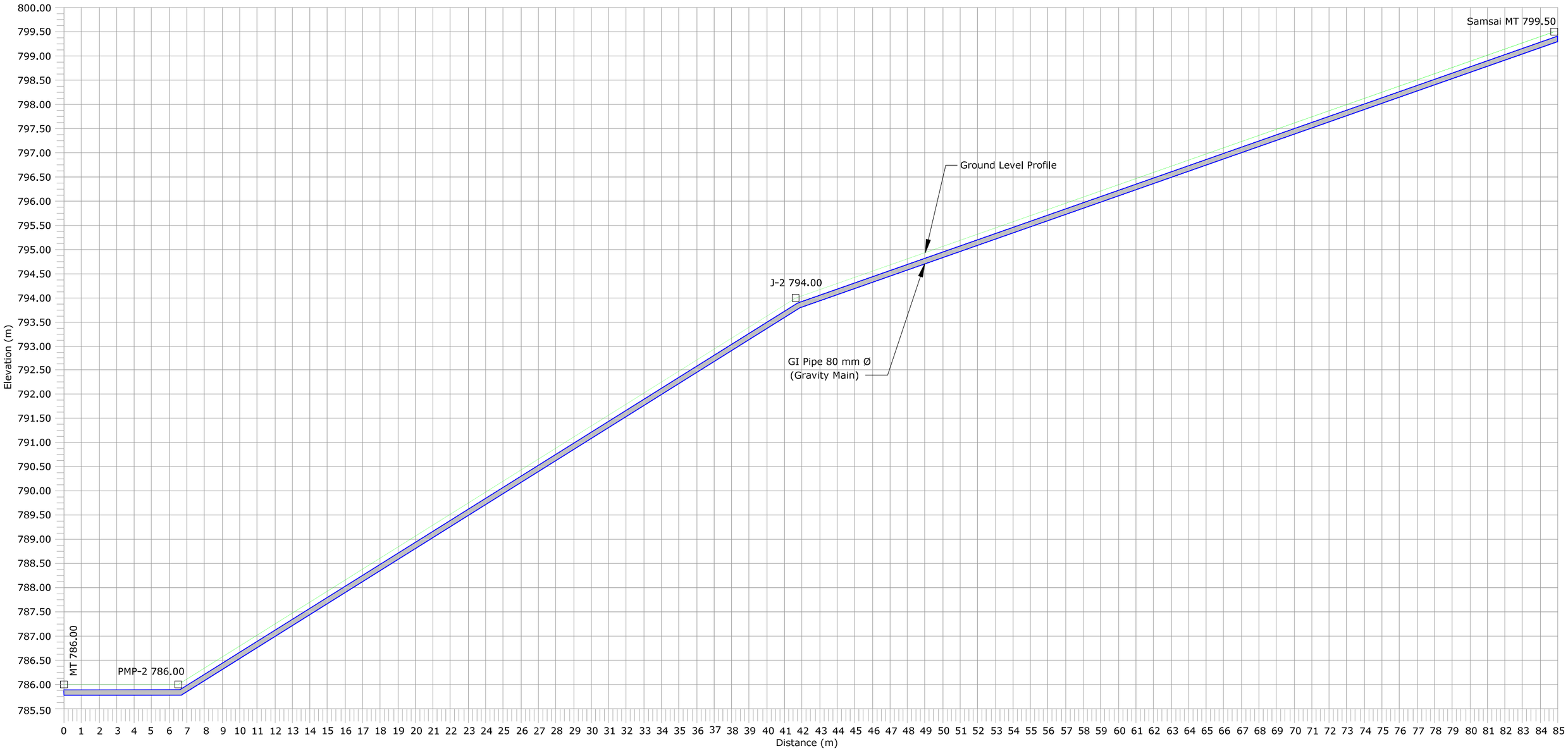

Legend :-

1. Ground Level
2. Rising Main
3. Junction
4. Air Valve
5. Scour Valve

Note:-

1 - Air Valves are Considered to be provided at 500 m c/c and at High Points.
2 - Scour Valves are Provided at 2000 m c/c Distance.
3 - Above is Tentative Arrangement. Based on Actual Site Condition size, Quantity and Location of Proposed Valves May Vary.

	SIGN.												
	INITIALS												
	REVISIONS												
P0	SIGN.												22-06-2022
	INITIALS	BSN	ES	DVB							MK	DK	
	REVISIONS												
ISSUE		DRN	DSN	CHD	CV	EL	IC	ME			PE/PM	APPD	DATE (dd-mm-yyyy)
					CLEARED								

'P' (PRELIMINARY) ISSUES ARE NOT TO BE USED FOR CONSTRUCTION / FABRICATION BUT ARE ISSUED FOR LIMITED PURPOSES ONLY AS INDICATED IN THE SMALL BLOCK ABOVE THIS BLOCK.

CONSTRUCTION / FABRICATION WORK IS PERMITTED ON 'R' (RELEASED) ISSUES ONLY.

INFORMATION CONTAINED WITHIN 'HOLD' IS NOT RELEASED FOR CONSTUCTION / FABRICATION. FIELD MUST GET DESIGN OFFICE TO CLEAR 'HOLDS' IN TIME BEFORE PROCEEDING WITH ANY CONSTRUCTION/ FABRICATION WORK RELATED TO 'HOLDS'.

SIGN. OF CLIENT:-

JE	AE	EE	SE

PURPOSE : FOR TENDER ONLY

DO NOT SCALE

Proprietary Notice and Version Control This document contains confidential information for use only by the " Client " ; for the Project under consideration, which is provided for the sole purpose of permitting the recipient to evaluate the information submitted herewith. In consideration of receipt of this document; unless agreed to in contrary in the Contract; the recipient agrees to maintain such information in confidence and to not reproduce or otherwise disclose this information to any person outside the recipient's organisation; except that there is no obligation to maintain the confidentiality of any information which was known to the recipient prior to receipt of such information from Tata Consulting Engineers Limited, or becomes publicly known through no fault of recipient, or Tata Consulting Engineers Limited, or is received without obligation of confidentiality from a third party owing no obligation of confidentiality to Tata Consulting Engineers Limited. All information given under this version over rides all and any kind of offers, assumptions, deliverables and contracts submitted verbally (and subsequently communicated in writing) or in writing or otherwise given under any and all previous version/s.

FILE NAME 12503A-CV-34373-Rev-P0

DETAILED DESIGN CONSULTANCY, HP-SHIVA (PACKAGE-CS09)

IRRIGATION, HORTICULTURE, ORCHARDS AND VALUE CHAIN DEVELOPMENT

PROPOSED L-SECTION-LIS SAMSAI

GHUMARWIN BLOCK, BILASPUR DISTRICT

TATA CONSULTING ENGINEERS LIMITED

MUMBAI

SCALE : NTS	DWG NO. TCE.12503A-CV-3082-WS-34373		ISSUE P0
DC & DISC: DEL-CV			

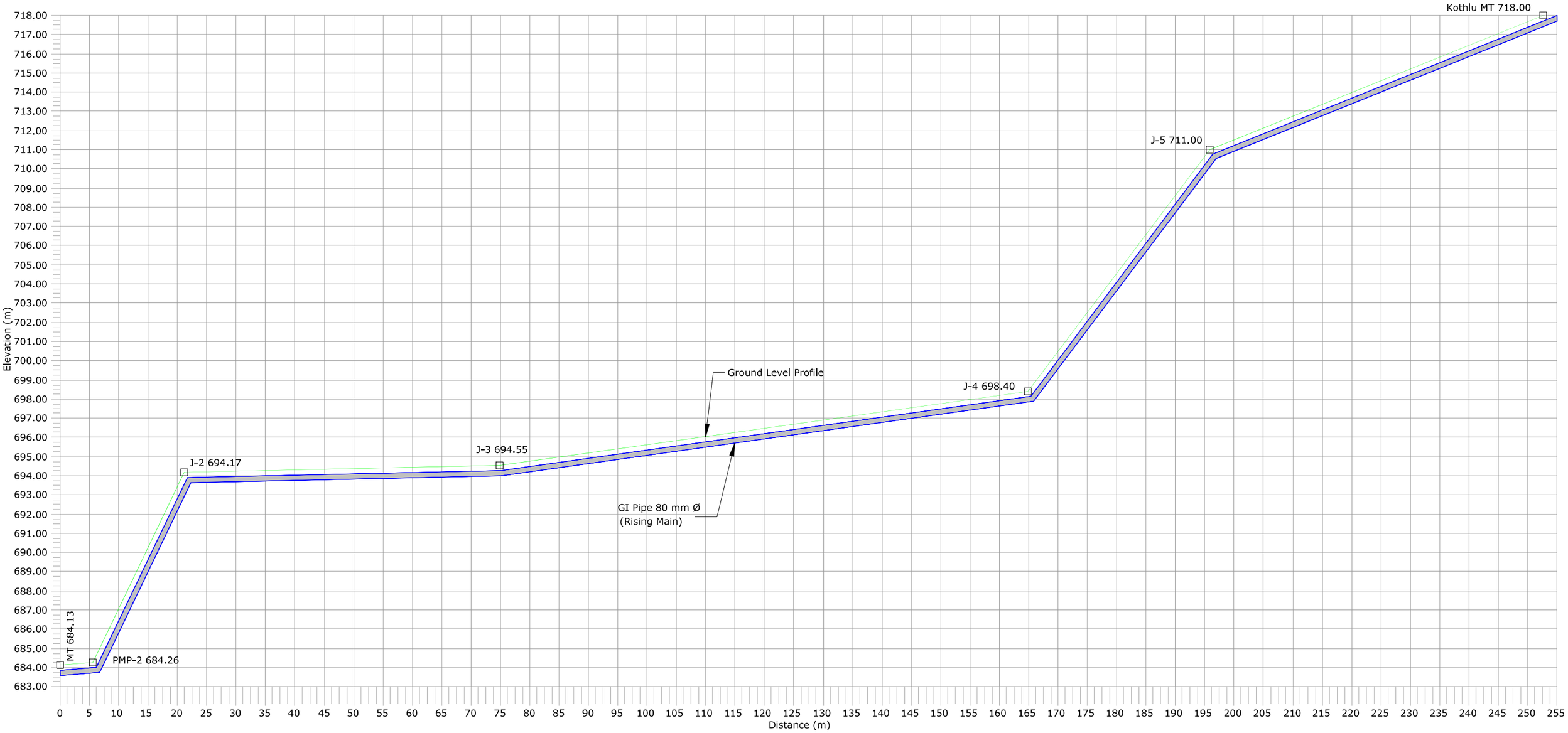

Legend :-

1. Ground Level
2. Rising Main
3. Junction
4. Air Valve
5. Scour Valve

Note:-

1 - Air Valves are Considered to be provided at 500 m c/c and at High Points.
2 - Scour Valves are Provided at 2000 m c/c Distance.
3 - Above is Tentative Arrangement. Based on Actual Site Condition size, Quantity and Location of Proposed Valves May Vary.

	SIGN.													
	INITIALS													
	REVISIONS													
P0	SIGN.													22-06-2022
	INITIALS	BSN	ES	DVB							MK	DK		
	REVISIONS													
ISSUE		DRN	DSN	CHD	CV	EL	IC	ME			PE/PM	APPD	DATE (dd-mm-yyyy)	
					CLEARED									

'P' (PRELIMINARY) ISSUES ARE NOT TO BE USED FOR CONSTRUCTION / FABRICATION BUT ARE ISSUED FOR LIMITED PURPOSES ONLY AS INDICATED IN THE SMALL BLOCK ABOVE THIS BLOCK.

CONSTRUCTION / FABRICATION WORK IS PERMITTED ON 'R' (RELEASED) ISSUES ONLY.

INFORMATION CONTAINED WITHIN 'HOLD' IS NOT RELEASED FOR CONSTUCTION / FABRICATION. FIELD MUST GET DESIGN OFFICE TO CLEAR 'HOLDS' IN TIME BEFORE PROCEEDING WITH ANY CONSTRUCTION/ FABRICATION WORK RELATED TO 'HOLDS'.

SIGN. OF CLIENT:-

JE	AE	EE	SE

PURPOSE : FOR TENDER ONLY

DO NOT SCALE

Proprietary Notice and Version Control This document contains confidential information for use only by the " Client " ; for the Project under consideration, which is provided for the sole purpose of permitting the recipient to evaluate the information submitted herewith. In consideration of receipt of this document; unless agreed to in contrary in the Contract; the recipient agrees to maintain such information in confidence and to not reproduce or otherwise disclose this information to any person outside the recipient's organisation; except that there is no obligation to maintain the confidentiality of any information which was known to the recipient prior to receipt of such information from Tata Consulting Engineers Limited, or becomes publicly known through no fault of recipient, or Tata Consulting Engineers Limited, or is received without obligation of confidentiality from a third party owing no obligation of confidentiality to Tata Consulting Engineers Limited. All information given under this version over rides all and any kind of offers, assumptions, deliverables and contracts submitted verbally (and subsequently communicated in writing) or in writing or otherwise given under any and all previous version/s.

FILE NAME 12503A-CV-34374-Rev-P0

DETAILED DESIGN CONSULTANCY, HP-SHIVA (PACKAGE-CS09)

IRRIGATION, HORTICULTURE, ORCHARDS AND VALUE CHAIN DEVELOPMENT

PROPOSED L-SECTION-LIS KOTHLU

SADAR-BILASPUR BLOCK, BILASPUR DISTRICT

TATA CONSULTING ENGINEERS LIMITED

MUMBAI

SCALE : NTS	DWG NO. TCE.12503A-CV-3082-WS-34374		ISSUE P0
DC & DISC: DEL-CV			

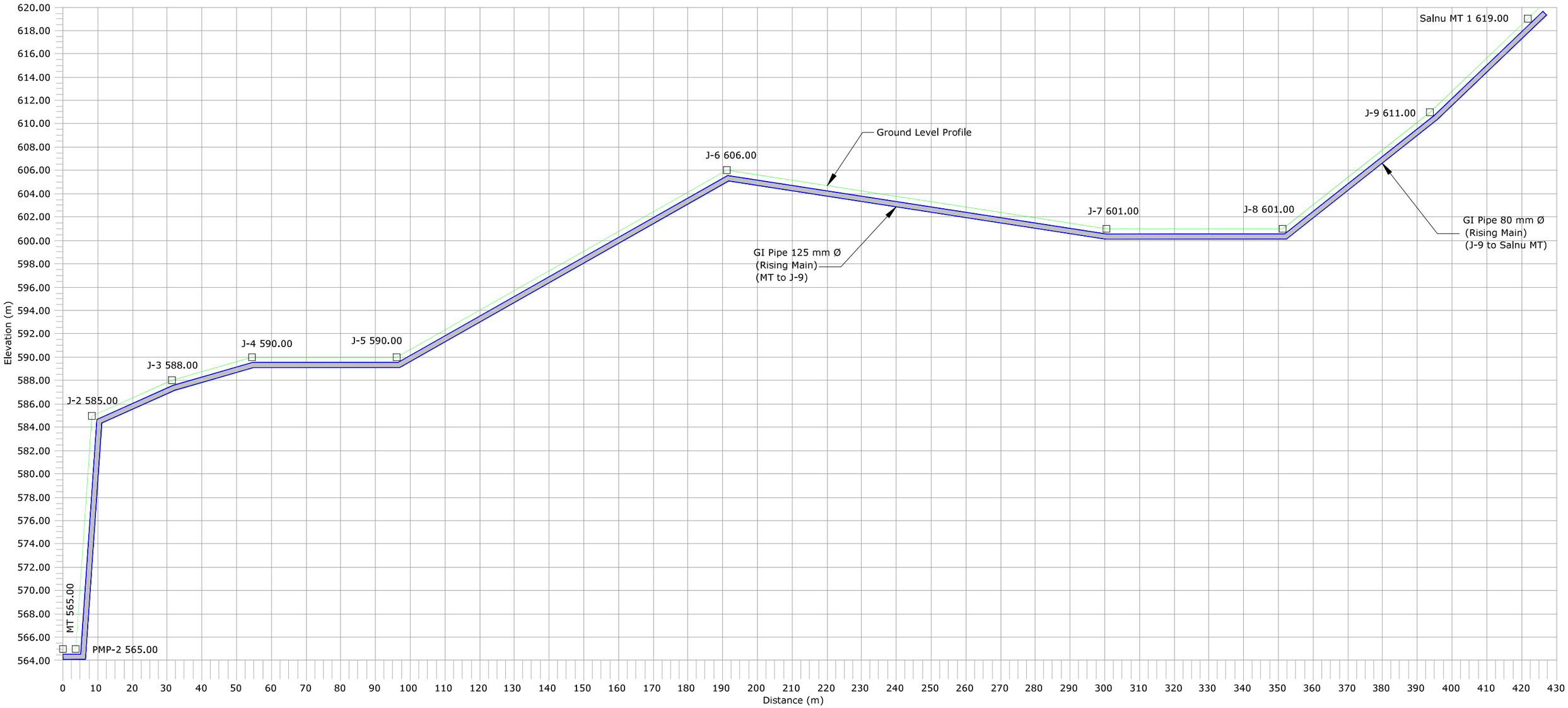

Legend :-

1. Ground Level
2. Rising Main
3. Junction
4. Air Valve
5. Scour Valve

Note:-

1 - Air Valves are Considered to be provided at 500 m c/c and at High Points.
2 - Scour Valves are Provided at 2000 m c/c Distance.
3 - Above is Tentative Arrangement. Based on Actual Site Condition size, Quantity and Location of Proposed Valves May Vary.

	SIGN.													
	INITIALS													
	REVISIONS													
	SIGN.													
P0	INITIALS	BSN	ES	DVB							MK	DK	22-06-2022	
	REVISIONS													
ISSUE		DRN	DSN	CHD	CV	EL	IC	ME			PE/PM	APPD	DATE (dd-mm-yyyy)	
					CLEARED									

'P' (PRELIMINARY) ISSUES ARE NOT TO BE USED FOR CONSTRUCTION / FABRICATION BUT ARE ISSUED FOR LIMITED PURPOSES ONLY AS INDICATED IN THE SMALL BLOCK ABOVE THIS BLOCK.

CONSTRUCTION / FABRICATION WORK IS PERMITTED ON 'R' (RELEASED) ISSUES ONLY.

INFORMATION CONTAINED WITHIN 'HOLD' IS NOT RELEASED FOR CONSTUCTION / FABRICATION. FIELD MUST GET DESIGN OFFICE TO CLEAR 'HOLDS' IN TIME BEFORE PROCEEDING WITH ANY CONSTRUCTION/ FABRICATION WORK RELATED TO 'HOLDS'.

SIGN. OF CLIENT:–

JE	AE	EE	SE

PURPOSE : FOR TENDER ONLY

DO NOT SCALE

Proprietary Notice and Version Control This document contains confidential information for use only by the " Client " ; for the Project under consideration, which is provided for the sole purpose of permitting the recipient to evaluate the information submitted herewith. In consideration of receipt of this document; unless agreed to in contrary in the Contract; the recipient agrees to maintain such information in confidence and to not reproduce or otherwise disclose this information to any person outside the recipient's organisation; except that there is no obligation to maintain the confidentiality of any information which was known to the recipient prior to receipt of such information from Tata Consulting Engineers Limited, or becomes publicly known (through no fault of recipient, or Tata Consulting Engineers Limited, or is received without obligation of confidentiality from a third party owing no obligation of confidentiality to Tata Consulting Engineers Limited. All information given under this version over rides all and any kind of offers, assumptions, deliverables and contracts submitted verbally (and subsequently communicated in writing) or in writing or otherwise given under any and all previous version/s.

FILE NAME 12503A–CV–34375–Rev–P0

DETAILED DESIGN CONSULTANCY, HP–SHIVA (PACKAGE–CS09)

IRRIGATION, HORTICULTURE, ORCHARDS AND VALUE CHAIN DEVELOPMENT

PROPOSED L–SECTION–LIS SALNU

SADAR–BILASPUR BLOCK, BILASPUR DISTRICT

(SHEET 1 OF 3)

TATA CONSULTING ENGINEERS LIMITED

MUMBAI

SCALE : NTS	DWG NO. TCE.12503A–CV–3082–WS–34375	ISSUE P0
DC & DISC: DEL–CV		

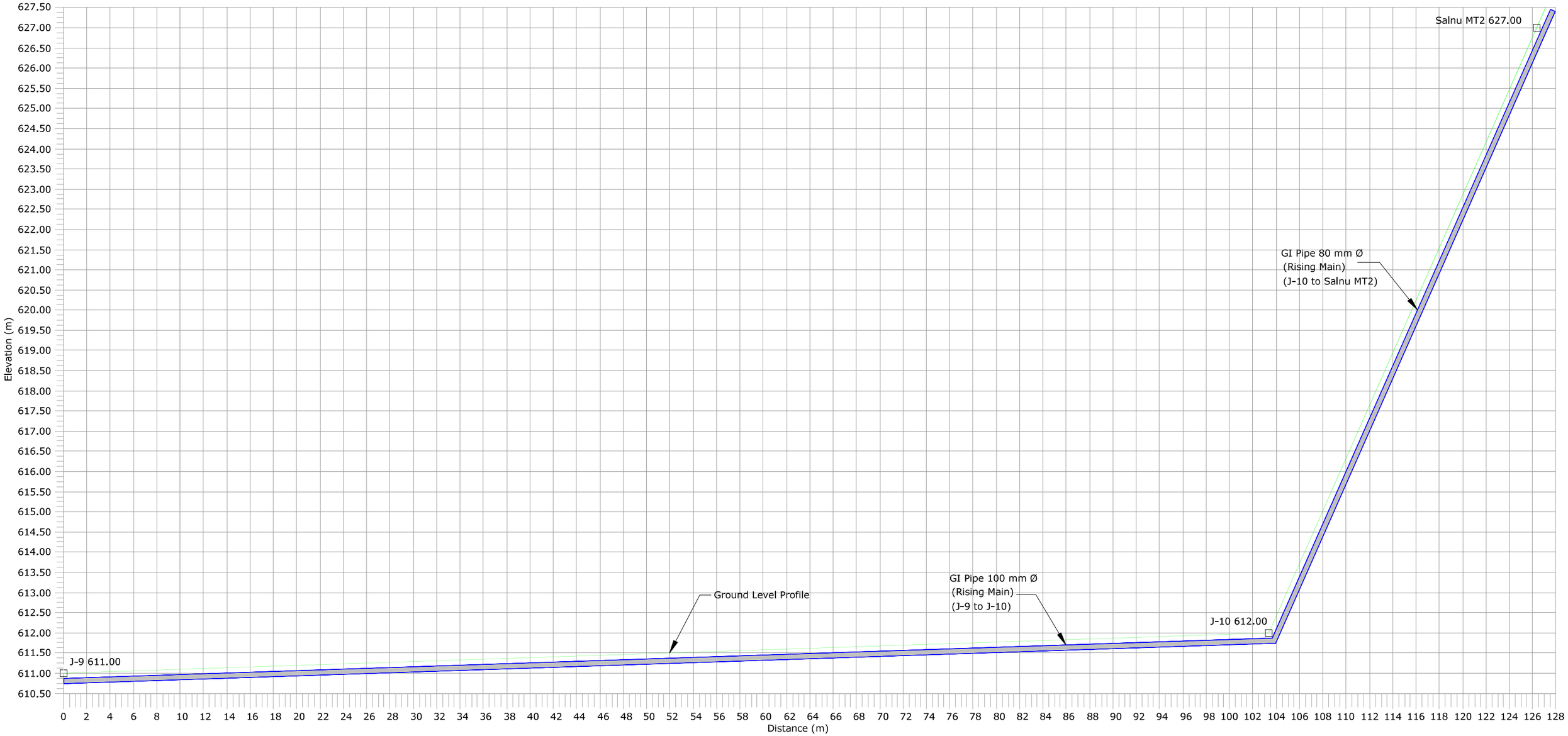

Legend :-

1. Ground Level
2. Rising Main
3. Junction
4. Air Valve
5. Scour Valve

Note:-

1 - Air Valves are Considered to be provided at 500 m c/c and at High Points.
2 - Scour Valves are Provided at 2000 m c/c Distance.
3 - Above is Tentative Arrangement. Based on Actual Site Condition size, Quantity and Location of Proposed Valves May Vary.

	SIGN.													
	INITIALS													
	REVISIONS													
P0	SIGN.													22-06-2022
	INITIALS	BSN	ES	DVB							MK	DK		
	REVISIONS													
ISSUE		DRN	DSN	CHD	CV	EL	IC	ME			PE/PM	APPD	DATE (dd-mm-yyyy)	
					CLEARED									

'P' (PRELIMINARY) ISSUES ARE NOT TO BE USED FOR CONSTRUCTION / FABRICATION BUT ARE ISSUED FOR LIMITED PURPOSES ONLY AS INDICATED IN THE SMALL BLOCK ABOVE THIS BLOCK.

CONSTRUCTION / FABRICATION WORK IS PERMITTED ON 'R' (RELEASED) ISSUES ONLY.

INFORMATION CONTAINED WITHIN 'HOLD' IS NOT RELEASED FOR CONSTUCTION / FABRICATION. FIELD MUST GET DESIGN OFFICE TO CLEAR 'HOLDS' IN TIME BEFORE PROCEEDING WITH ANY CONSTRUCTION/ FABRICATION WORK RELATED TO 'HOLDS'.

SIGN. OF CLIENT:-

JE	AE	EE	SE

PURPOSE : FOR TENDER ONLY

DO NOT SCALE

Proprietary Notice and Version Control This document contains confidential information for use only by the " Client " ; for the Project under consideration, which is provided for the sole purpose of permitting the recipient to evaluate the information submitted herewith. In consideration of receipt of this document; unless agreed to in contrary in the Contract; the recipient agrees to maintain such information in confidence and to not reproduce or otherwise disclose this information to any person outside the recipient's organisation; except that there is no obligation to maintain the confidentiality of any information which was known to the recipient prior to receipt of such information from Tata Consulting Engineers Limited, or becomes publicly known through no fault of recipient, or Tata Consulting Engineers Limited, or is received without obligation of confidentiality from a third party owing no obligation of confidentiality to Tata Consulting Engineers Limited. All information given under this version over rides all and any kind of offers, assumptions, deliverables and contracts submitted verbally (and subsequently communicated in writing) or in writing or otherwise given under any and all previous version/s.

FILE NAME 12503A-CV-34376-Rev-P0

DETAILED DESIGN CONSULTANCY, HP-SHIVA (PACKAGE-CS09)

IRRIGATION, HORTICULTURE, ORCHARDS AND VALUE CHAIN DEVELOPMENT

PROPOSED L-SECTION-LIS SALNU

SADAR-BILASPUR BLOCK, BILASPUR DISTRICT

(SHEET 2 OF 3)

TATA CONSULTING ENGINEERS LIMITED

MUMBAI

SCALE : NTS	DWG NO. TCE.12503A-CV-3082-WS-34376	ISSUE P0
DC & DISC: DEL-CV		

Legend :-

1. Ground Level
2. Rising Main
3. Junction
4. Air Valve
5. Scour Valve

Note:-

1 - Air Valves are Considered to be provided at 500 m c/c and at High Points.
2 - Scour Valves are Provided at 2000 m c/c Distance.
3 - Above is Tentative Arrangement. Based on Actual Site Condition size, Quantity and Location of Proposed Valves May Vary.

	SIGN.													
	INITIALS													
	REVISIONS													
P0	SIGN.													22-06-2022
	INITIALS	BSN	ES	DVB							MK	DK		
	REVISIONS													
ISSUE		DRN	DSN	CHD	CV	EL	IC	ME			PE/PM	APPD	DATE (dd-mm-yyyy)	
					CLEARED									

'P' (PRELIMINARY) ISSUES ARE NOT TO BE USED FOR CONSTRUCTION / FABRICATION BUT ARE ISSUED FOR LIMITED PURPOSES ONLY AS INDICATED IN THE SMALL BLOCK ABOVE THIS BLOCK.

CONSTRUCTION / FABRICATION WORK IS PERMITTED ON 'R' (RELEASED) ISSUES ONLY.

INFORMATION CONTAINED WITHIN 'HOLD' IS NOT RELEASED FOR CONSTUCTION / FABRICATION. FIELD MUST GET DESIGN OFFICE TO CLEAR 'HOLDS' IN TIME BEFORE PROCEEDING WITH ANY CONSTRUCTION/ FABRICATION WORK RELATED TO 'HOLDS'.

SIGN. OF CLIENT:-

JE	AE	EE	SE

PURPOSE : FOR TENDER ONLY

DO NOT SCALE

Proprietary Notice and Version Control This document contains confidential information for use only by the " Client " ; for the Project under consideration, which is provided for the sole purpose of permitting the recipient to evaluate the information submitted herewith. In consideration of receipt of this document; unless agreed to in contrary in the Contract; the recipient agrees to maintain such information in confidence and to not reproduce or otherwise disclose this information to any person outside the recipient's organisation; except that there is no obligation to maintain the confidentiality of any information which was known to the recipient prior to receipt of such information from Tata Consulting Engineers Limited, or becomes publicly known (through no fault of recipient, or Tata Consulting Engineers Limited, or is received without obligation of confidentiality from a third party owing no obligation of confidentiality to Tata Consulting Engineers Limited. All information given under this version over rides all and any kind of offers, assumptions, deliverables and contracts submitted verbally (and subsequently communicated in writing) or in writing or otherwise given under any and all previous version/s.

FILE NAME 12503A-CV-34377-Rev-P0

DETAILED DESIGN CONSULTANCY, HP-SHIVA (PACKAGE-CS09)

IRRIGATION, HORTICULTURE, ORCHARDS AND VALUE CHAIN DEVELOPMENT

PROPOSED L-SECTION-LIS SALNU CLUSTER
SADAR-BILASPUR BLOCK, BILASPUR DISTRICT
(SHEET 3 OF 3)

TATA CONSULTING ENGINEERS LIMITED
MUMBAI

SCALE : NTS	DWG NO. TCE.12503A-CV-3082-WS-34377	ISSUE P0
DC & DISC: DEL-CV		

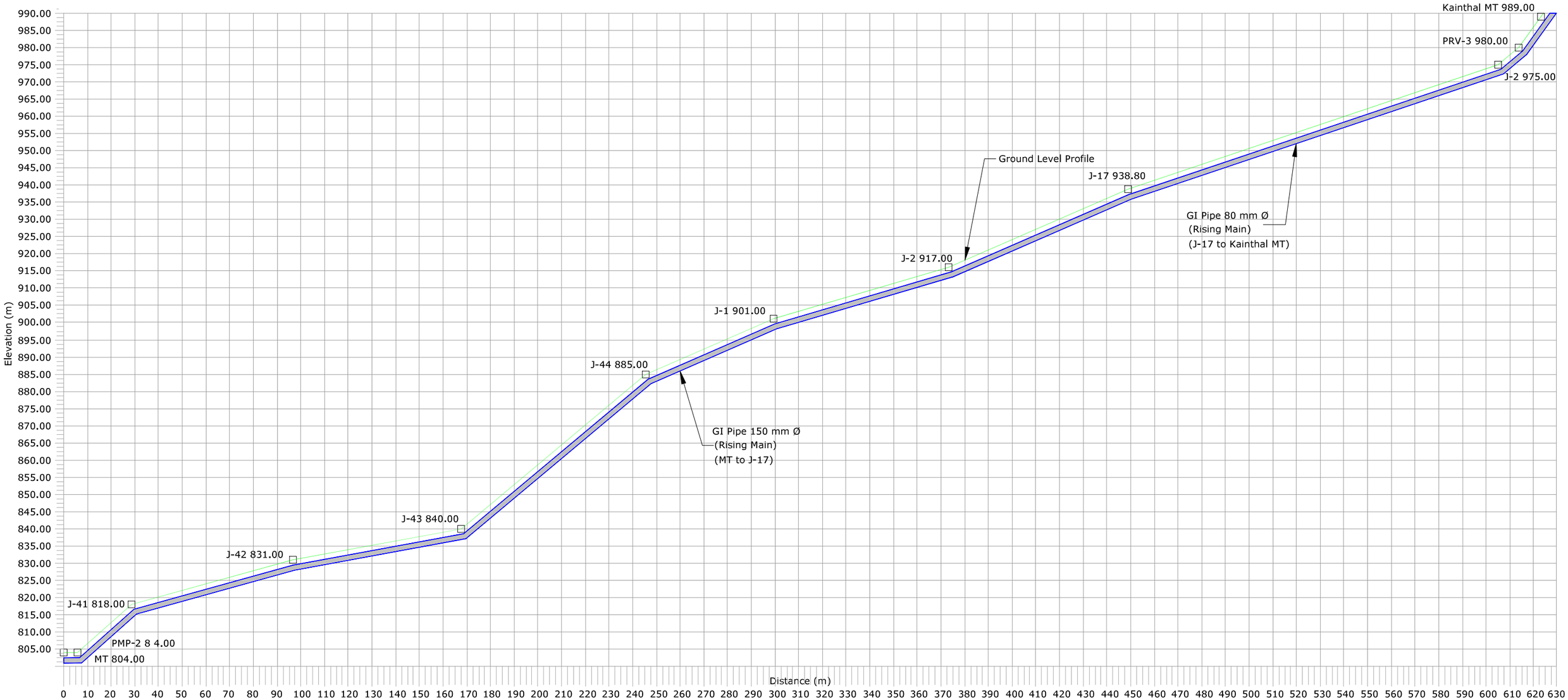

Legend :-

1. Ground Level
2. Rising Main
3. Junction
4. Air Valve
5. Scour Valve

Note:-

1 - Air Valves are Considered to be provided at 500 m c/c and at High Points.
2 - Scour Valves are Provided at 2000 m c/c Distance.
3 - Above is Tentative Arrangement. Based on Actual Site Condition size, Quantity and Location of Proposed Valves May Vary.

	SIGN.												
	INITIALS												
	REVISIONS												
P0	SIGN.												22-06-2022
	INITIALS	BSN	ES	DVB							MK	DK	
	REVISIONS												
ISSUE		DRN	DSN	CHD	CV	EL	IC	ME			PE/PM	APPD	DATE (dd-mm-yyyy)
					CLEARED								

'P' (PRELIMINARY) ISSUES ARE NOT TO BE USED FOR CONSTRUCTION / FABRICATION BUT ARE ISSUED FOR LIMITED PURPOSES ONLY AS INDICATED IN THE SMALL BLOCK ABOVE THIS BLOCK.

CONSTRUCTION / FABRICATION WORK IS PERMITTED ON 'R' (RELEASED) ISSUES ONLY.

INFORMATION CONTAINED WITHIN 'HOLD' IS NOT RELEASED FOR CONSTUCTION / FABRICATION. FIELD MUST GET DESIGN OFFICE TO CLEAR 'HOLDS' IN TIME BEFORE PROCEEDING WITH ANY CONSTRUCTION/ FABRICATION WORK RELATED TO 'HOLDS'.

SIGN. OF CLIENT:-

JE	AE	EE	SE

PURPOSE : FOR TENDER ONLY

DO NOT SCALE

Proprietary Notice and Version Control This document contains confidential information for use only by the " Client " ; for the Project under consideration, which is provided for the sole purpose of permitting the recipient to evaluate the information submitted herewith. In consideration of receipt of this document; unless agreed to in contrary in the Contract; the recipient agrees to maintain such information in confidence and to not reproduce or otherwise disclose this information to any person outside the recipient's organisation; except that there is no obligation to maintain the confidentiality of any information which was known to the recipient prior to receipt of such information from Tata Consulting Engineers Limited, or becomes publicly known through no fault of recipient, or Tata Consulting Engineers Limited, or is received without obligation of confidentiality from a third party owing no obligation of confidentiality to Tata Consulting Engineers Limited. All information given under this version over rides all and any kind of offers, assumptions, deliverables and contracts submitted verbally (and subsequently communicated in writing) or in writing or otherwise given under any and all previous version/s.

FILE NAME 12503A-CV-34378-Rev-P0

DETAILED DESIGN CONSULTANCY, HP-SHIVA (PACKAGE-CS09)

IRRIGATION, HORTICULTURE, ORCHARDS AND VALUE CHAIN DEVELOPMENT

PROPOSED L-SECTION-LIS PERCOLATION WELL SCHEME
SADAR-BILASPUR BLOCK, BILASPUR DISTRICT
(SHEET 1 OF 5)

TATA CONSULTING ENGINEERS LIMITED
MUMBAI

SCALE : NTS	DWG NO. TCE.12503A-CV-3082-WS-34378	ISSUE P0
DC & DISC: DEL-CV		

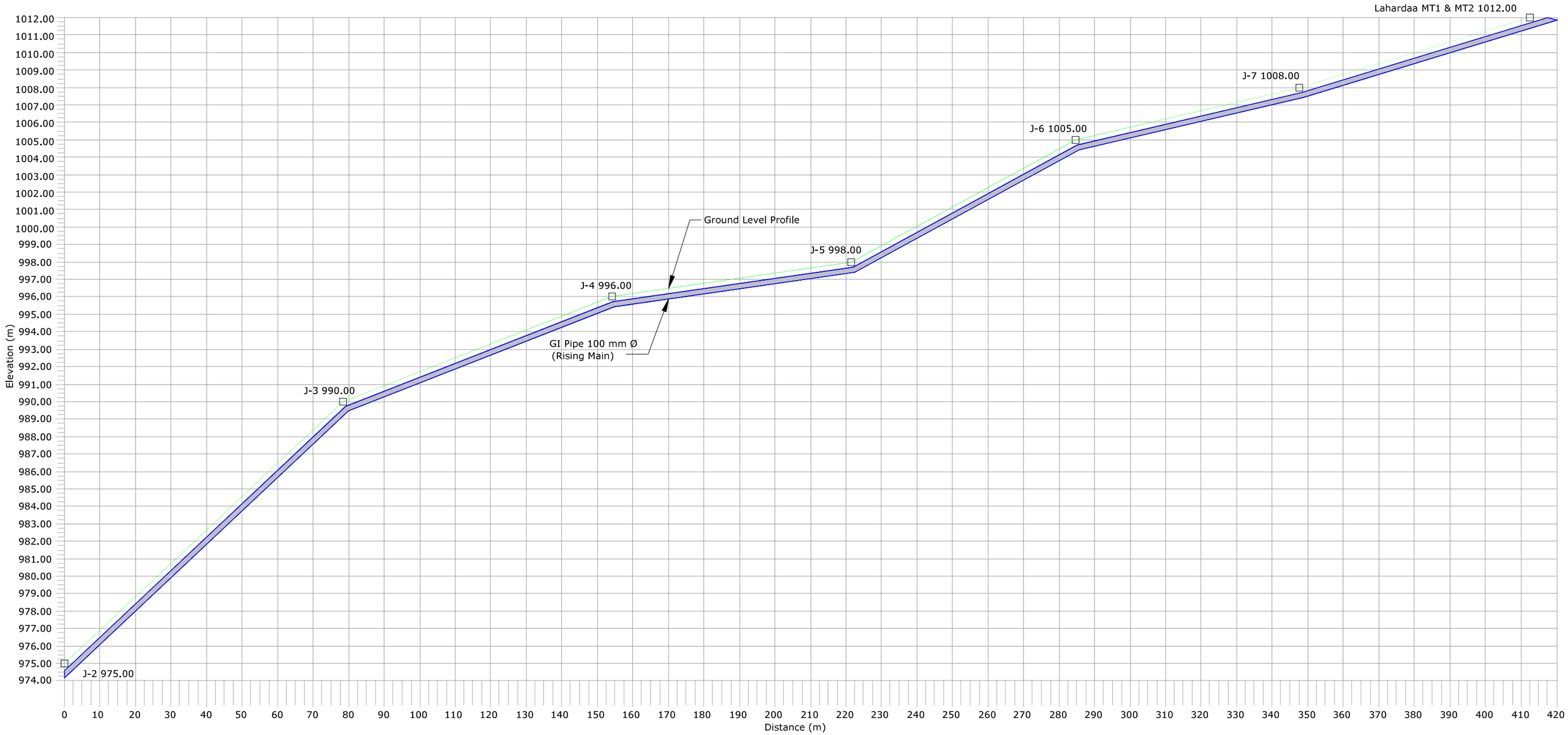

Legend :-

1. Ground Level
2. Rising Main
3. Junction
4. Air Valve
5. Scour Valve

Note:-

1 - Air Valves are Considered to be provided at 500 m c/c and at High Points.
2 - Scour Valves are Provided at 2000 m c/c Distance.
3 - Above is Tentative Arrangement. Based on Actual Site Condition size, Quantity and Location of Proposed Valves May Vary.

	SIGN.													
	INITIALS													
	REVISIONS													
P0	SIGN.													22-06-2022
	INITIALS	BSN	ES	DVB							MK	DK		
	REVISIONS													
ISSUE		DRN	DSN	CHD	CV	EL	IC	ME			PE/PM	APPD	DATE (dd-mm-yyyy)	
					CLEARED									

'P' (PRELIMINARY) ISSUES ARE NOT TO BE USED FOR CONSTRUCTION / FABRICATION BUT ARE ISSUED FOR LIMITED PURPOSES ONLY AS INDICATED IN THE SMALL BLOCK ABOVE THIS BLOCK.

CONSTRUCTION / FABRICATION WORK IS PERMITTED ON 'R' (RELEASED) ISSUES ONLY.

INFORMATION CONTAINED WITHIN 'HOLD' IS NOT RELEASED FOR CONSTUCTION / FABRICATION. FIELD MUST GET DESIGN OFFICE TO CLEAR 'HOLDS' IN TIME BEFORE PROCEEDING WITH ANY CONSTRUCTION/ FABRICATION WORK RELATED TO 'HOLDS'.

SIGN. OF CLIENT:-

JE	AE	EE	SE

PURPOSE : FOR TENDER ONLY

DO NOT SCALE

Proprietary Notice and Version Control This document contains confidential information for use only by the " Client " ; for the Project under consideration, which is provided for the sole purpose of permitting the recipient to evaluate the information submitted herewith. In consideration of receipt of this document; unless agreed to in contrary in the Contract; the recipient agrees to maintain such information in confidence and to not reproduce or otherwise disclose this information to any person outside the recipient's organisation; except that there is no obligation to maintain the confidentiality of any information which was known to the recipient prior to receipt of such information from Tata Consulting Engineers Limited, or becomes publicly known through no fault of recipient, or Tata Consulting Engineers Limited, or is received without obligation of confidentiality from a third party owing no obligation of confidentiality to Tata Consulting Engineers Limited. All information given under this version over rides all and any kind of offers, assumptions, deliverables and contracts submitted verbally (and subsequently communicated in writing) or in writing or otherwise given under any and all previous version/s.

FILE NAME 12503A-CV-34379-Rev-P0

DETAILED DESIGN CONSULTANCY, HP-SHIVA (PACKAGE-CS09)

IRRIGATION, HORTICULTURE, ORCHARDS AND VALUE CHAIN DEVELOPMENT

PROPOSED L-SECTION-LIS PERCOLATION WELL SCHEME
SADAR-BILASPUR BLOCK, BILASPUR DISTRICT
(SHEET 2 OF 5)

TATA CONSULTING ENGINEERS LIMITED
MUMBAI

SCALE : NTS	DWG NO. TCE.12503A-CV-3082-WS-34379	ISSUE P0
DC & DISC: DEL-CV		

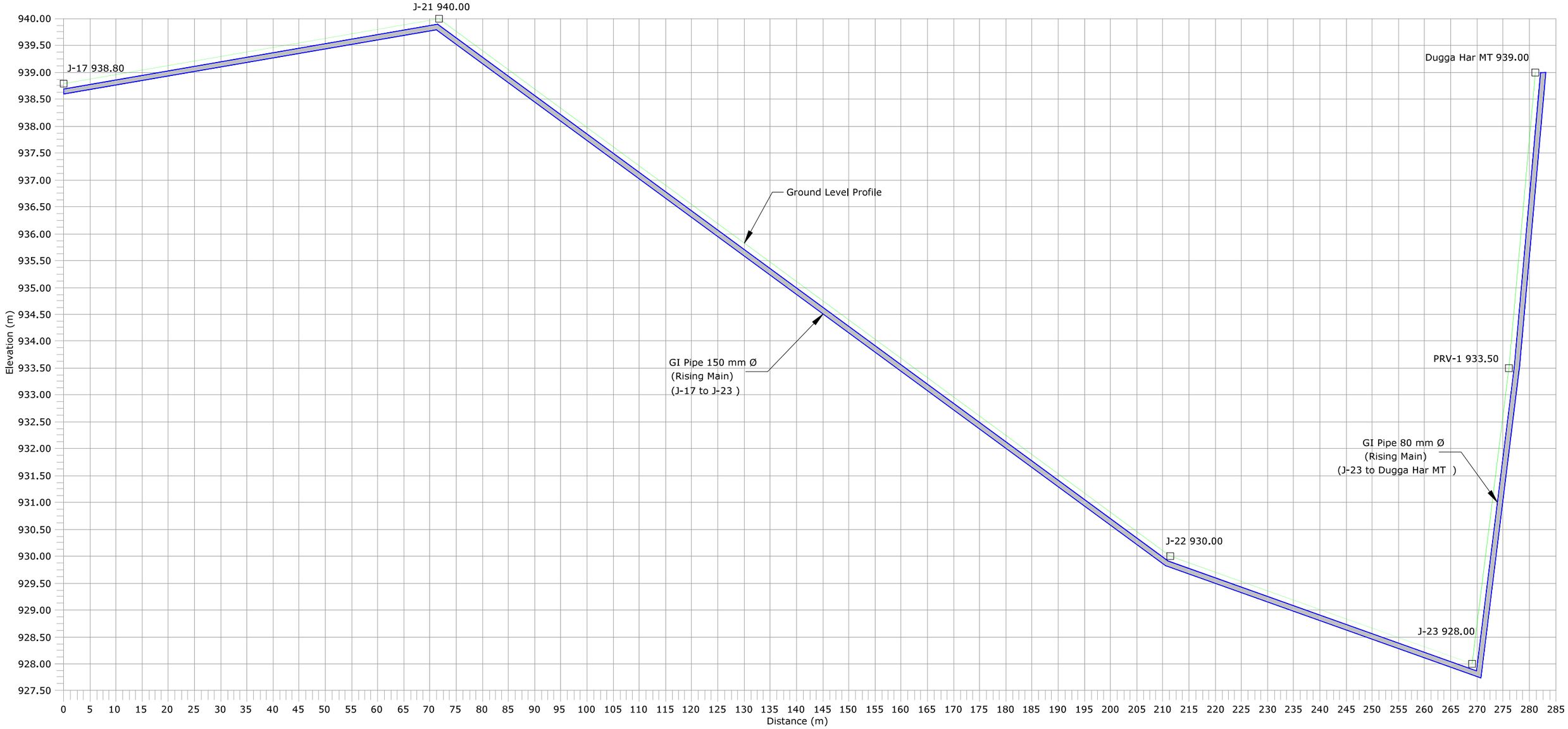

Legend :-

1. Ground Level
2. Rising Main
3. Junction
4. Air Valve
5. Scour Valve

Note:-

1 - Air Valves are Considered to be provided at 500 m c/c and at High Points.
2 - Scour Valves are Provided at 2000 m c/c Distance.
3 - Above is Tentative Arrangement. Based on Actual Site Condition size, Quantity and Location of Proposed Valves May Vary.

	SIGN.													
	INITIALS													
	REVISIONS													
P0	SIGN.													22-06-2022
	INITIALS	BSN	ES	DVB								MK	DK	
	REVISIONS													
ISSUE		DRN	DSN	CHD	CV	EL	IC	ME				PE/PM	APPD	DATE (dd-mm-yyyy)
					CLEARED									

'P' (PRELIMINARY) ISSUES ARE NOT TO BE USED FOR CONSTRUCTION / FABRICATION BUT ARE ISSUED FOR LIMITED PURPOSES ONLY AS INDICATED IN THE SMALL BLOCK ABOVE THIS BLOCK.

CONSTRUCTION / FABRICATION WORK IS PERMITTED ON 'R' (RELEASED) ISSUES ONLY.

INFORMATION CONTAINED WITHIN 'HOLD' IS NOT RELEASED FOR CONSTUCTION / FABRICATION. FIELD MUST GET DESIGN OFFICE TO CLEAR 'HOLDS' IN TIME BEFORE PROCEEDING WITH ANY CONSTRUCTION/ FABRICATION WORK RELATED TO 'HOLDS'.

SIGN. OF CLIENT:-

JE	AE	EE	SE

PURPOSE : FOR TENDER ONLY

DO NOT SCALE

Proprietary Notice and Version Control This document contains confidential information for use only by the " Client " ; for the Project under consideration, which is provided for the sole purpose of permitting the recipient to evaluate the information submitted herewith. In consideration of receipt of this document; unless agreed to in contrary in the Contract; the recipient agrees to maintain such information in confidence and to not reproduce or otherwise disclose this information to any person outside the recipient's organisation; except that there is no obligation to maintain the confidentiality of any information which was known to the recipient prior to receipt of such information from Tata Consulting Engineers Limited, or becomes publicly known through no fault of recipient, or Tata Consulting Engineers Limited, or is received without obligation of confidentiality from a third party owing no obligation of confidentiality to Tata Consulting Engineers Limited. All information given under this version over rides all and any kind of offers, assumptions, deliverables and contracts submitted verbally (and subsequently communicated in writing) or in writing or otherwise given under any and all previous version/s.

FILE NAME 12503A-CV-34380-Rev-P0

DETAILED DESIGN CONSULTANCY, HP-SHIVA (PACKAGE-CS09)

IRRIGATION, HORTICULTURE, ORCHARDS AND VALUE CHAIN DEVELOPMENT

PROPOSED L-SECTION-LIS PERCOLATION WELL SCHEME
SADAR-BILASPUR BLOCK, BILASPUR DISTRICT
(SHEET 3 OF 5)

TATA CONSULTING ENGINEERS LIMITED
MUMBAI

SCALE : NTS	DWG NO. TCE.12503A-CV-3082-WS-34380		ISSUE P0
DC & DISC: DEL-CV			

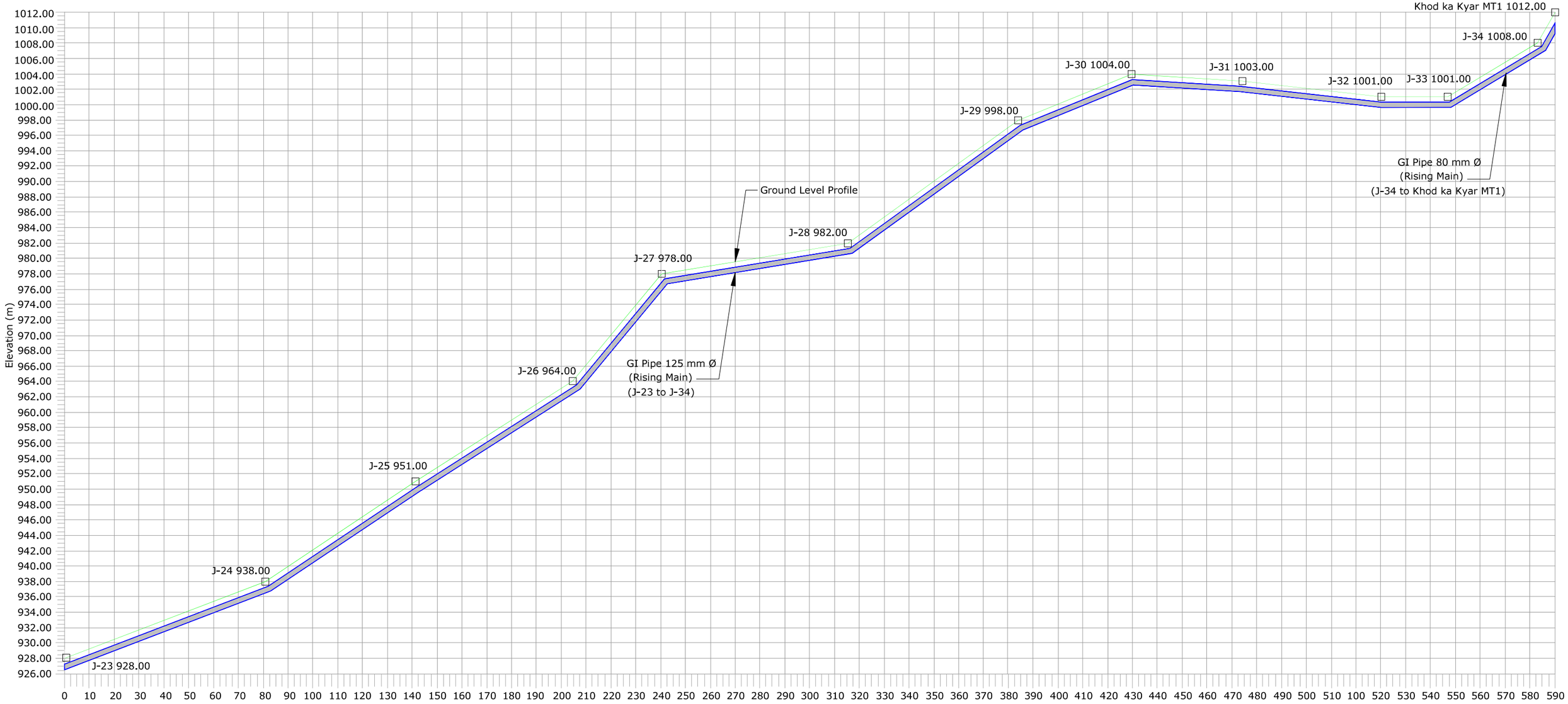

Legend :-

1. Ground Level
2. Rising Main
3. Junction
4. Air Valve
5. Scour Valve

Note:-

1 - Air Valves are Considered to be provided at 500 m c/c and at High Points.
2 - Scour Valves are Provided at 2000 m c/c Distance.
3 - Above is Tentative Arrangement. Based on Actual Site Condition size, Quantity and Location of Proposed Valves May Vary.

	SIGN.													
	INITIALS													
	REVISIONS													
P0	SIGN.													22-06-2022
	INITIALS	BSN	ES	DVB							MK	DK		
	REVISIONS													
ISSUE		DRN	DSN	CHD	CV	EL	IC	ME			PE/PM	APPD	DATE (dd-mm-yyyy)	
					CLEARED									

'P' (PRELIMINARY) ISSUES ARE NOT TO BE USED FOR CONSTRUCTION / FABRICATION BUT ARE ISSUED FOR LIMITED PURPOSES ONLY AS INDICATED IN THE SMALL BLOCK ABOVE THIS BLOCK.

CONSTRUCTION / FABRICATION WORK IS PERMITTED ON 'R' (RELEASED) ISSUES ONLY.

INFORMATION CONTAINED WITHIN 'HOLD' IS NOT RELEASED FOR CONSTUCTION / FABRICATION. FIELD MUST GET DESIGN OFFICE TO CLEAR 'HOLDS' IN TIME BEFORE PROCEEDING WITH ANY CONSTRUCTION/ FABRICATION WORK RELATED TO 'HOLDS'.

SIGN. OF CLIENT:-

JE	AE	EE	SE

PURPOSE : FOR TENDER ONLY

DO NOT SCALE

Proprietary Notice and Version Control This document contains confidential information for use only by the " Client " ; for the Project under consideration, which is provided for the sole purpose of permitting the recipient to evaluate the information submitted herewith. In consideration of receipt of this document; unless agreed to in contrary in the Contract; the recipient agrees to maintain such information in confidence and to not reproduce or otherwise disclose this information to any person outside the recipient's organisation; except that there is no obligation to maintain the confidentiality of any information which was known to the recipient prior to receipt of such information from Tata Consulting Engineers Limited, or becomes publicly known through no fault of recipient, or Tata Consulting Engineers Limited, or is received without obligation of confidentiality from a third party owing no obligation of confidentiality to Tata Consulting Engineers Limited. All information given under this version over rides all and any kind of offers, assumptions, deliverables and contracts submitted verbally (and subsequently communicated in writing) or in writing or otherwise given under any and all previous version/s.

FILE NAME 12503A-CV-34381-Rev-P0

DETAILED DESIGN CONSULTANCY, HP-SHIVA (PACKAGE-CS09)

IRRIGATION, HORTICULTURE, ORCHARDS AND VALUE CHAIN DEVELOPMENT

PROPOSED L-SECTION-LIS PERCOLATION WELL SCHEME
SADAR-BILASPUR BLOCK, BILASPUR DISTRICT
(SHEET 4 OF 5)

TATA CONSULTING ENGINEERS LIMITED
MUMBAI

SCALE : NTS	DWG NO. TCE.12503A-CV-3082-WS-34381		ISSUE P0
DC & DISC: DEL-CV			

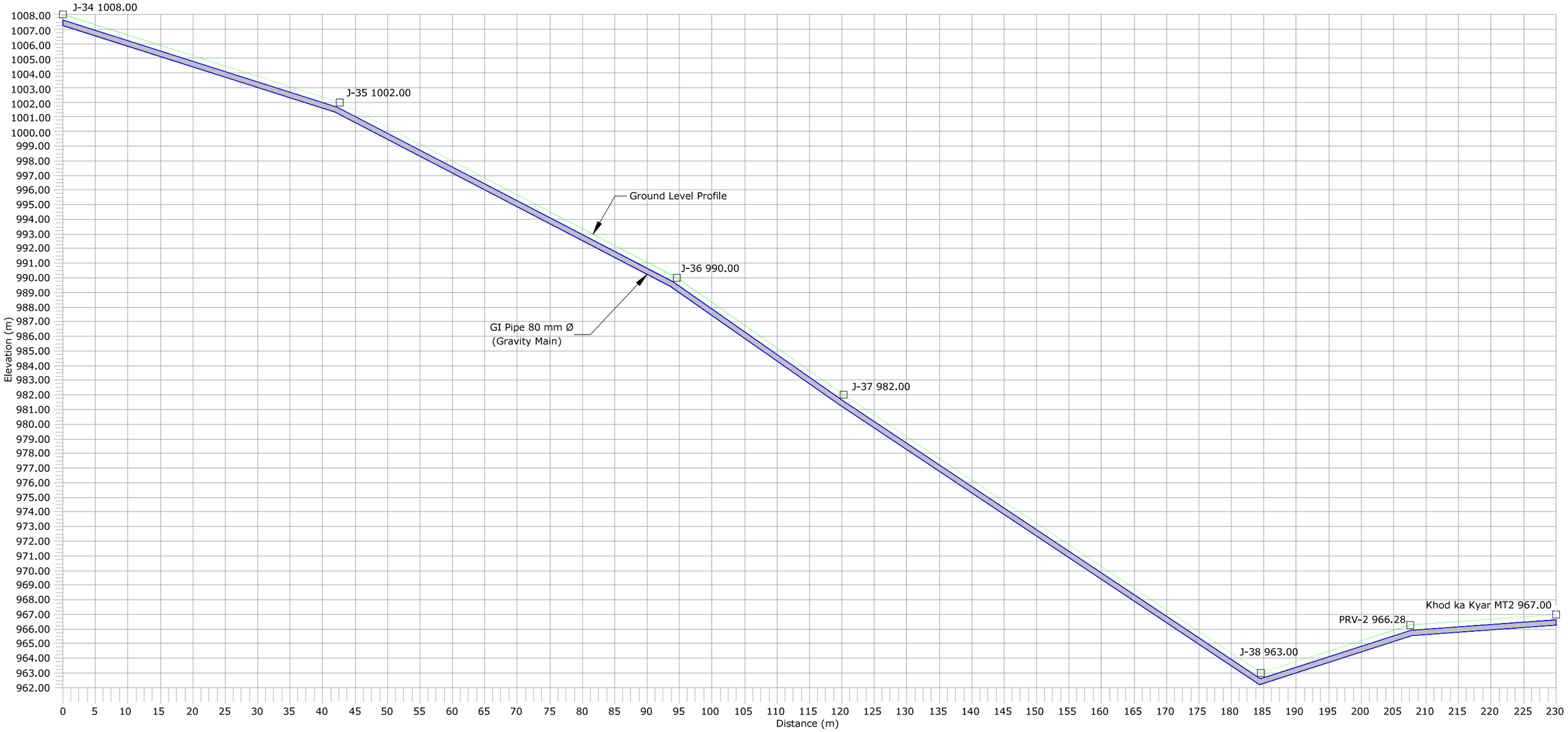

Legend :-

1. Ground Level
2. Rising Main
3. Junction
4. Air Valve
5. Scour Valve

Note:-

1 - Air Valves are Considered to be provided at 500 m c/c and at High Points.
2 - Scour Valves are Provided at 2000 m c/c Distance.
3 - Above is Tentative Arrangement. Based on Actual Site Condition size, Quantity and Location of Proposed Valves May Vary.

	SIGN.													
	INITIALS													
	REVISIONS													
P0	SIGN.													22-06-2022
	INITIALS	BSN	ES	DVB							MK	DK		
	REVISIONS													
ISSUE		DRN	DSN	CHD	CV	EL	IC	ME			PE/PM	APPD	DATE (dd-mm-yyyy)	
					CLEARED									

'P' (PRELIMINARY) ISSUES ARE NOT TO BE USED FOR CONSTRUCTION / FABRICATION BUT ARE ISSUED FOR LIMITED PURPOSES ONLY AS INDICATED IN THE SMALL BLOCK ABOVE THIS BLOCK.

CONSTRUCTION / FABRICATION WORK IS PERMITTED ON 'R' (RELEASED) ISSUES ONLY.

INFORMATION CONTAINED WITHIN 'HOLD' IS NOT RELEASED FOR CONSTUCTION / FABRICATION. FIELD MUST GET DESIGN OFFICE TO CLEAR 'HOLDS' IN TIME BEFORE PROCEEDING WITH ANY CONSTRUCTION/ FABRICATION WORK RELATED TO 'HOLDS'.

SIGN. OF CLIENT:-

JE	AE	EE	SE

PURPOSE : FOR TENDER ONLY

DO NOT SCALE

Proprietary Notice and Version Control This document contains confidential information for use only by the " Client " ; for the Project under consideration, which is provided for the sole purpose of permitting the recipient to evaluate the information submitted herewith. In consideration of receipt of this document; unless agreed to in contrary in the Contract; the recipient agrees to maintain such information in confidence and to not reproduce or otherwise disclose this information to any person outside the recipient's organisation; except that there is no obligation to maintain the confidentiality of any information which was known to the recipient prior to receipt of such information from Tata Consulting Engineers Limited, or becomes publicly known through no fault of recipient, or Tata Consulting Engineers Limited, or is received without obligation of confidentiality from a third party owing no obligation of confidentiality to Tata Consulting Engineers Limited. All information given under this version over rides all and any kind of offers, assumptions, deliverables and contracts submitted verbally (and subsequently communicated in writing) or in writing or otherwise given under any and all previous version/s.

FILE NAME 12503A-CV-34382-Rev-P0

DETAILED DESIGN CONSULTANCY, HP-SHIVA (PACKAGE-CS09)

IRRIGATION, HORTICULTURE, ORCHARDS AND VALUE CHAIN DEVELOPMENT

PROPOSED L-SECTION-LIS PERCOLATION WELL SCHEME
SADAR-BILASPUR BLOCK, BILASPUR DISTRICT
(SHEET 5 OF 5)

TATA CONSULTING ENGINEERS LIMITED
MUMBAI

SCALE : NTS	DWG NO. TCE.12503A-CV-3082-WS-34382	ISSUE P0
DC & DISC: DEL-CV		

Legend :-

1. Ground Level
2. Rising Main
3. Junction
4. Air Valve
5. Scour Valve

Note:-

1 - Air Valves are Considered to be provided at 500 m c/c and at High Points.
2 - Scour Valves are Provided at 2000 m c/c Distance.
3 - Above is Tentative Arrangement. Based on Actual Site Condition size, Quantity and Location of Proposed Valves May Vary.

	SIGN.													
	INITIALS													
	REVISIONS													
P0	SIGN.													
	INITIALS	BSN	ES	DVB							MK	DK	22-06-2022	
	REVISIONS													
ISSUE		DRN	DSN	CHD	CV	EL	IC	ME			PE/PM	APPD	DATE (dd-mm-yyyy)	
					CLEARED									

'P' (PRELIMINARY) ISSUES ARE NOT TO BE USED FOR CONSTRUCTION / FABRICATION BUT ARE ISSUED FOR LIMITED PURPOSES ONLY AS INDICATED IN THE SMALL BLOCK ABOVE THIS BLOCK.

CONSTRUCTION / FABRICATION WORK IS PERMITTED ON 'R' (RELEASED) ISSUES ONLY.

INFORMATION CONTAINED WITHIN 'HOLD' IS NOT RELEASED FOR CONSTUCTION / FABRICATION. FIELD MUST GET DESIGN OFFICE TO CLEAR 'HOLDS' IN TIME BEFORE PROCEEDING WITH ANY CONSTRUCTION/ FABRICATION WORK RELATED TO 'HOLDS'.

SIGN. OF CLIENT:-

JE	AE	EE	SE

PURPOSE : FOR TENDER ONLY

DO NOT SCALE

Proprietary Notice and Version Control This document contains confidential information for use only by the " Client " ; for the Project under consideration, which is provided for the sole purpose of permitting the recipient to evaluate the information submitted herewith. In consideration of receipt of this document; unless agreed to in contrary in the Contract; the recipient agrees to maintain such information in confidence and to not reproduce or otherwise disclose this information to any person outside the recipient's organisation; except that there is no obligation to maintain the confidentiality of any information which was known to the recipient prior to receipt of such information from Tata Consulting Engineers Limited, or becomes publicly known through no fault of recipient, or Tata Consulting Engineers Limited, or is received without obligation of confidentiality from a third party owing no obligation of confidentiality to Tata Consulting Engineers Limited. All information given under this version over rides all and any kind of offers, assumptions, deliverables and contracts submitted verbally (and subsequently communicated in writing) or in writing or otherwise given under any and all previous version/s.

FILE NAME 12503A-CV-34383-Rev-P0

DETAILED DESIGN CONSULTANCY, HP-SHIVA (PACKAGE-CS09)

IRRIGATION, HORTICULTURE, ORCHARDS AND VALUE CHAIN DEVELOPMENT

PROPOSED L-SECTION-LIS KAROT

SADAR-BILASPUR BLOCK, BILASPUR DISTRICT

TATA CONSULTING ENGINEERS LIMITED

MUMBAI

SCALE : NTS

DC & DISC: DEL-CV

DWG NO. TCE.12503A-CV-3082-WS-34383

ISSUE P0

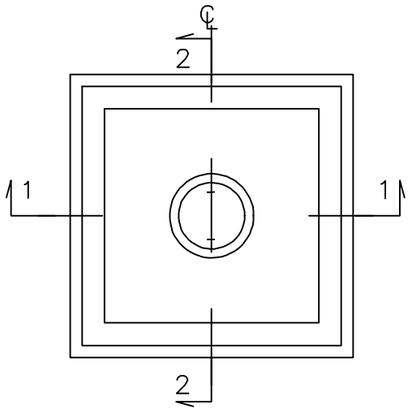

TOP PLAN

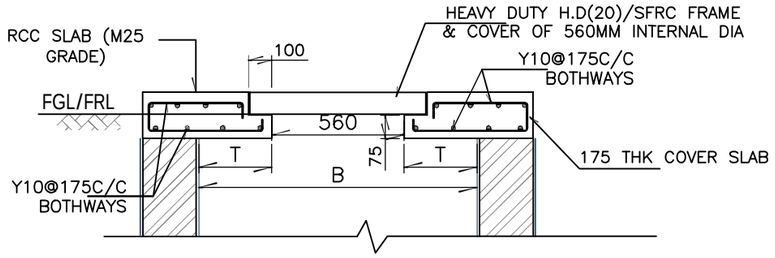

DETAIL A

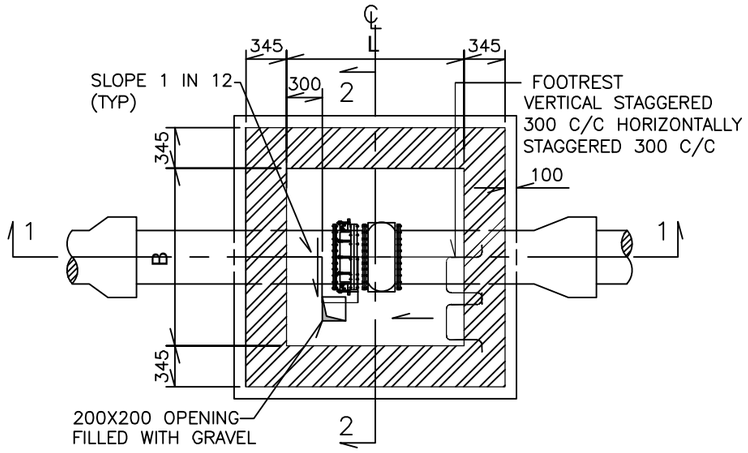

SECTIONAL PLAN

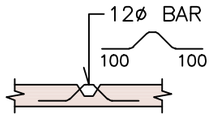

LIFTING HOOK DETAIL

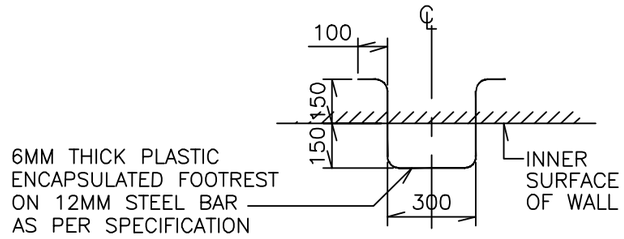

TYPICAL DETAILS OF ACCESS RUNGS

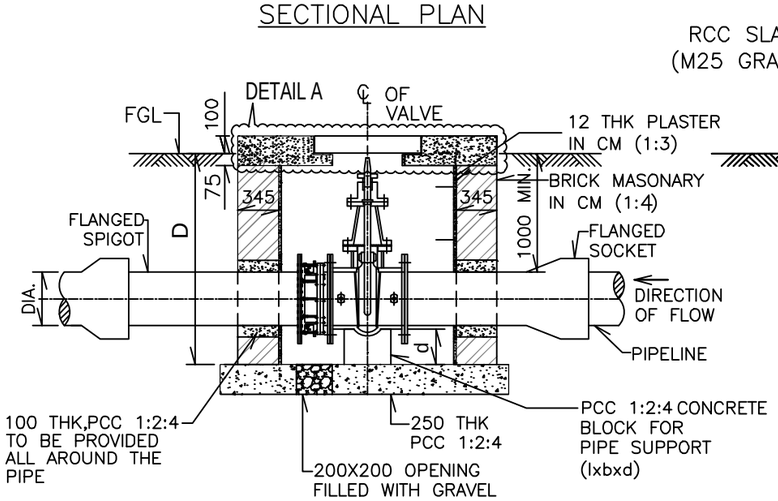

SECTION 1–1

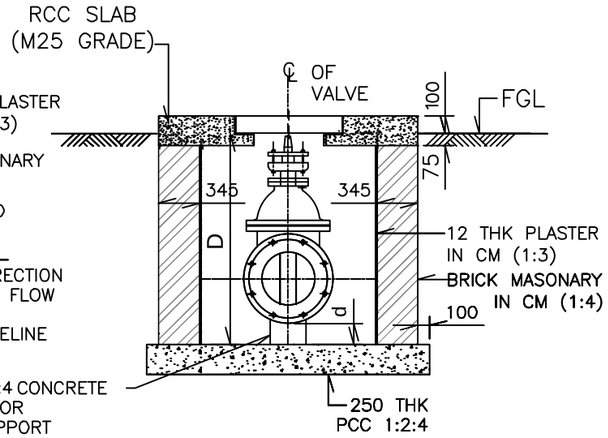

SECTION 2–2

LEGEND

TYP	— — —	TYPICAL
DIA	— — —	DIAMETER
UN	— — —	UNLESS NOTED
MS	— — —	MILD STEEL
DI	— — —	DUCTILE IRON
THK	— — —	THICK
℄	— — —	CENTER LINE
IL	— — —	INVERT LEVEL
PCC	— — —	PLAIN CEMENT CONCRETE
RC	— — —	REINFORCED CONCRETE
EQ.	— — —	EQUAL

NOTES:

1. ALL DIMENSIONS ARE IN MILLIMETRE AND LEVELS IN METRE UNLESS NOTED.
2. GRADE OF PCC SHALL BE M15 WITH MAXIMUM 40mm DOWN GRADED AGGREGATES CONFORMING TO SPECIFICATION.
3. REINFORCEMENT SHALL BE HIGH YIELD STRENGTH DEFORMED BARS TO GRADE Fe500 CONFORMING TO IS:1786 (LATEST ISSUE).
4. CLEAR COVER TO MAIN REINFORCEMENT SHALL BE AS FOLLOWS. RC COVER–20mm TOP & BOTTOM
5. SAFE BEARING CAPACITY OF SOIL IS CONSIDERED AS 15 T/Sqm. AT FOUNDING LEVEL.
6. THE ARRANGEMENT RELATED TO VALVE AND FITTINGS SHOWN IN THE DRAWING ARE INDICATIVE ONLY. BEFORE CONSTRUCTION, ARRANGEMENT OF VALVE AND FITTINGS SHALL BE PROVIDED BY THE CONTRACTOR TO ENGINEER FOR APPROVAL.
7. BRICK MASONRY SHALL BE IN CM (1:4).
8. BRICKS SHALL BE OF MINIMUM 75 Kg/cm^2 COMPRESSIVE STRENGTH.
9. THE TYPICAL DETAILS OF CHAMBER ARE APPLICABLE FOR 150mm TO 600mm DIA PIPELINE.
10. VALVE CHAMBERS SHALL BE CONSTRUCTED IN RCC IN CASE HIGH WATER TABLE AND SPACE CONSTRAINT.
11. THE FOOTREST SHALL BE PROVIDED FROM TOP COVER TO PIPE BARREL TOP AND THEN PIPE BARREL TOP UPTO 300mm ABOVE CHAMBER BOTTOM.
12. VALVE SPINDLE EXTENSIONS TO BE FITTED TO BRING TOP OF VALVE SPINDLE TO WITHIN 100mm TO UNDERSIDE OF RC COVER.

TABLE:

DIA. OF PIPE	CHAMBER SIZE			PEDESTAL		
	L	B	D	l	b	d (Min)
300	1200	1200	1600	150	250	100
200	1200	1200	1600	100	200	100
150	900	900	1600	100	150	100

	SIGN.												
	INITIALS												
	REVISIONS												
P0	SIGN.												
	INITIALS	SM	MJ	DVP							NMS	NMS	15-04-2022
	REVISIONS												
ISSUE		DRN	DSN	CHD	CV	EL	IC	ME			PE/PM	APPD	DATE (dd-mm-yyyy)
					CLEARED								

'P' (PRELIMINARY) ISSUES ARE NOT TO BE USED FOR CONSTRUCTION / FABRICATION BUT ARE ISSUED FOR LIMITED PURPOSES ONLY AS INDICATED IN THE SMALL BLOCK ABOVE THIS BLOCK.

CONSTRUCTION / FABRICATION WORK IS PERMITTED ON 'R' (RELEASED) ISSUES ONLY.

INFORMATION CONTAINED WITHIN 'HOLD' IS NOT RELEASED FOR CONSTUCTION / FABRICATION. FIELD MUST GET DESIGN OFFICE TO CLEAR 'HOLDS' IN TIME BEFORE PROCEEDING WITH ANY CONSTRUCTION/ FABRICATION WORK RELATED TO 'HOLDS'.

SIGN. OF CLIENT:–

JE	AE	EE	SE

PURPOSE : FOR TENDER ONLY

DO NOT SCALE

Proprietary Notice and Version Control This document contains confidential information for use only by the "Client"; for the Project under consideration, which is provided for the sole purpose of permitting the recipient to evaluate the information submitted herewith. In consideration of receipt of this document; unless agreed to in contrary in the Contract; the recipient agrees to maintain such information in confidence and to not reproduce or otherwise disclose this information to any person outside the recipient's organisation; except that there is no obligation to maintain the confidentiality of any information which was known to the recipient prior to receipt of such information from Tata Consulting Engineers Limited, or becomes publicly known through no fault of recipient, or Tata Consulting Engineers Limited, or is received without obligation of confidentiality from a third party owing no obligation of confidentiality to Tata Consulting Engineers Limited. All information given under this version over rides all and any kind of offers, assumptions, deliverables and contracts submitted verbally (and subsequently communicated in writing) or in writing or otherwise given under any and all previous version/s.

FILE NAME 12503A–CV–30581–Rev–P0

DETAILED DESIGN CONSULTANCY, HP–SHIVA (PACKAGE CS09)

IRRIGATION, HORTICULTURE, ORCHARDS AND VALUE CHAIN DEVELOPMENT

TYPICAL SLUICE VALVE CHAMBER DETAILS

TATA CONSULTING ENGINEERS LIMITED

MUMBAI

SCALE : NTS	DWG NO. TCE.12503A–CV–3082–WS–30581	ISSUE P0
DC & DISC: DEL–CV		

SIZE–A3

FILE NAME: F–093–Rev–R1.DWG

TCE FORM NO. 093 R1

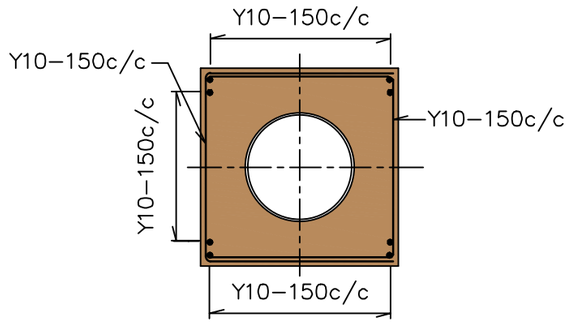

DETAILS OF CONCRETE BED & ENCASEMENT OF PIPE

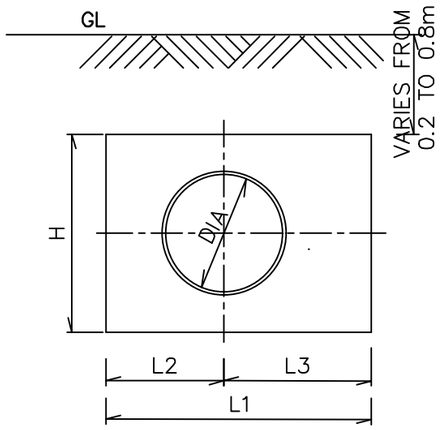

SECTION 1–1

TABLE

INTERNAL DIAMETER OF PIPE (mm)	ANGLE OF BEND	DESIGN PRESSURE (kg/m^2)	SOIL COVER OVER PIPE Ds (mm)	H (m)	L1 (m)	L2 (m)	L3 (m)	L (m)	B1 (m)	B2 (m)
100	90°	4.35	1000	0.70	0.75	0.40	0.35	0.77	0.70	0.35
100	45°	4.35	1000	0.60	0.55	0.30	0.25	0.57	0.60	0.30
100	22.5°	4.35	1000	0.45	0.45	0.25	0.20	0.46	0.50	0.25
100	90°	4.85	1000	0.70	0.80	0.45	0.35	0.82	0.70	0.35
100	45°	4.85	1000	0.60	0.55	0.30	0.25	0.57	0.60	0.30
100	22.5°	4.85	1000	0.50	0.45	0.25	0.20	0.47	0.50	0.25
100	90°	5.93	1000	0.80	0.75	0.40	0.35	0.78	0.80	0.40
100	45°	5.93	1000	0.65	0.65	0.35	0.30	0.67	0.70	0.35
100	22.5°	5.93	1000	0.50	0.55	0.30	0.25	0.56	0.50	0.25
150	90°	3.33	1000	0.85	0.85	0.45	0.40	0.88	0.90	0.45
150	45°	3.33	1000	0.70	0.70	0.40	0.30	0.72	0.70	0.35
150	22.5°	3.33	1000	0.55	0.55	0.30	0.25	0.57	0.50	0.25
250	90°	3.75	1000	1.25	1.25	0.70	0.55	1.29	1.30	0.65
250	45°	3.75	1000	1.00	1.05	0.60	0.45	1.08	1.00	0.50
250	22.5°	3.75	1000	0.80	0.80	0.45	0.35	0.82	0.80	0.40
250	90°	6.03	1000	1.45	1.45	0.80	0.65	1.49	1.50	0.75
250	45°	6.03	1000	1.15	1.25	0.70	0.55	1.28	1.10	0.55
250	22.5°	6.03	1000	0.95	0.90	0.50	0.40	0.93	0.90	0.45
350	90°	5.93	1000	1.80	1.80	1.00	0.80	1.86	1.80	0.90
350	45°	5.93	1000	1.45	1.55	0.85	0.70	1.59	1.50	0.75
350	22.5°	5.93	1000	1.20	1.15	0.65	0.50	1.19	1.20	0.60
500	90°	4.68	1000	2.15	2.05	1.15	0.90	2.12	2.20	1.10
500	45°	4.68	1000	1.70	1.80	1.00	0.80	1.85	1.70	0.85
500	22.5°	4.68	1000	1.40	1.35	0.75	0.60	1.39	1.40	0.70

LEGEND:

DIA ——— DIAMETER
B ——— BREADTH
L ——— LENGTH
H ——— HEIGHT
mm ——— MILLIMETERS

NOTES:

1. ALL DIMENSIONS ARE IN MILLIMETRES AND LEVELS IN METRES UNLESS NOTED.
2. INVERT LEVEL OF PIPES SHALL BE AS PER RELEVANT NETWORK DRAWINGS.
3. NO CONCRETE SHALL BE PLACED AROUND JOINTS OF PIPELINE, UNTIL THAT LENGTH OF PIPE HAS PASSED SECTIONAL HYDRAULIC TEST.
4. STEEL FOR REINFORCEMENT SHALL BE HIGH YIELD STRENGTH DEFORMED BARS OF GRADE Fe 500
5. REINFORCEMENT LAP LENGTHS SHALL BE 50xDIAMETER OF SMALLER BAR.
6. CONCRETE TO BE USED SHALL BE OF GRADE M20 WITH 20mm DOWN GRADED AGGRAGATES CONFORMING TO SPECIFICATIONS.
7. CLEAR COVER TO REINFORCEMENT BOTTOM AND SIDES – 30mm
8. DURING CONSTRUCTION, IF GROUND WATER TABLE IS MET WITH, IT SHALL BE BROUGHT TO THE NOTICE OF ENGINEER FOR MAKING NECESSARY CHANGES IN THE DESIGN.
9. SOIL BENEATH AND BY THE SIDE OF THE THRUST BLOCK, WHICH ULTIMATELY BEARS THRUST THROUGH CONCRETE MEDIUM, MUST REMAIN UNDISTURBED. IN CASE ANY EXTRA EXCAVATION IS DONE IN TRENCHES, WHERE THE THRUST BLOCK IS TO BE PROVIDED, THE SAME SHALL BE FILLED WITH 1:4:8 CONCRETE
10. PIPES AND SPECIALS SHALL BE SUITABLY SUPPORTED WHILE CONCRETING THE THRUST BLOCK AS DIRECTED BY ENGINEER.
11. TESTING OF MAINS SHALL BE DONE AFTER CASTING OF THRUST BLOCKS AND COMPACTION OF BACKFILLING.
12. AT THE TIME OF TESTING, COMPACTED SOIL SHALL BE PLACED ON THE THRUST BLOCK UP TO THE ROAD LEVEL.
13. THRUST BLOCKS NEED TO BE PLACED AS PER SITE CONDITION

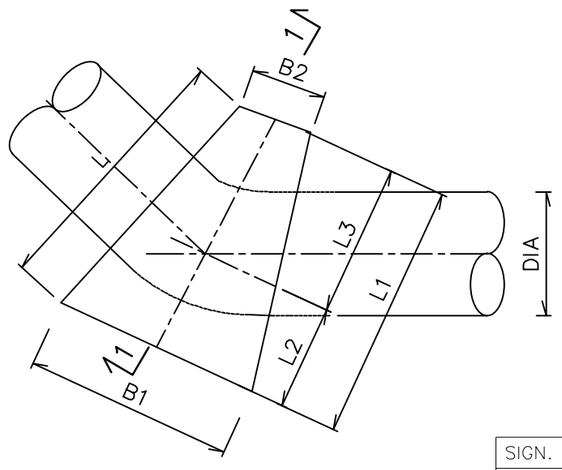

TYPICAL THRUST BLOCK

	SIGN.													
	INITIALS													
	REVISIONS													
P0	SIGN.													
	INITIALS	SM	MJ	DVP							NMS	NMS	15-04-2022
	REVISIONS													
ISSUE		DRN	DSN	CHD	CV	EL	IC	ME			PE/PM	APPD	DATE (dd-mm-yyyy)
					CLEARED								

'P' (PRELIMINARY) ISSUES ARE NOT TO BE USED FOR CONSTRUCTION / FABRICATION BUT ARE ISSUED FOR LIMITED PURPOSES ONLY AS INDICATED IN THE SMALL BLOCK ABOVE THIS BLOCK.

CONSTRUCTION / FABRICATION WORK IS PERMITTED ON 'R' (RELEASED) ISSUES ONLY.

INFORMATION CONTAINED WITHIN 'HOLD' IS NOT RELEASED FOR CONSTUCTION / FABRICATION. FIELD MUST GET DESIGN OFFICE TO CLEAR 'HOLDS' IN TIME BEFORE PROCEEDING WITH ANY CONSTRUCTION/ FABRICATION WORK RELATED TO 'HOLDS'.

SIGN. OF CLIENT:–

JE	AE	EE	SE

PURPOSE : FOR TENDER ONLY

DO NOT SCALE

Proprietary Notice and Version Control This document contains confidential information for use only by the " Client " ; for the Project under consideration, which is provided for the sole purpose of permitting the recipient to evaluate the information submitted herewith. In consideration of receipt of this document; unless agreed to in contrary in the Contract; the recipient agrees to maintain such information in confidence and to not reproduce or otherwise disclose this information to any person outside the recipient's organisation; except that there is no obligation to maintain the confidentiality of any information which was known to the recipient prior to receipt of such information from Tata Consulting Engineers Limited, or becomes publicly known through no fault of recipient, or Tata Consulting Engineers Limited, or is received without obligation of confidentiality from a third party owing no obligation of confidentiality to Tata Consulting Engineers Limited. All information given under this version over rides all and any kind of offers, assumptions, deliverables and contracts submitted verbaly (and subsequently communicated in writing) or in writing or otherwise given under any and all previous version/s.

FILE NAME 12503A–CV–30582–Rev–P0

DETAILED DESIGN CONSULTANCY, HP–SHIVA (PACKAGE CS09)

IRRIGATION, HORTICULTURE, ORCHARDS AND VALUE CHAIN DEVELOPMENT

TYPICAL DETAILS OF THRUST BLOCK

TATA CONSULTING ENGINEERS LIMITED

MUMBAI

SCALE : NTS	DWG NO. TCE.12503A–CV–3082–WS–30582		ISSUE P0
DC & DISC: DEL–CV			

SIZE:A3

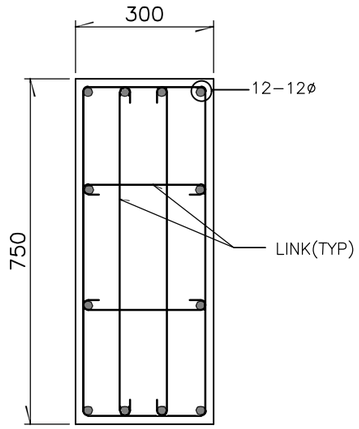

SEC 1-1

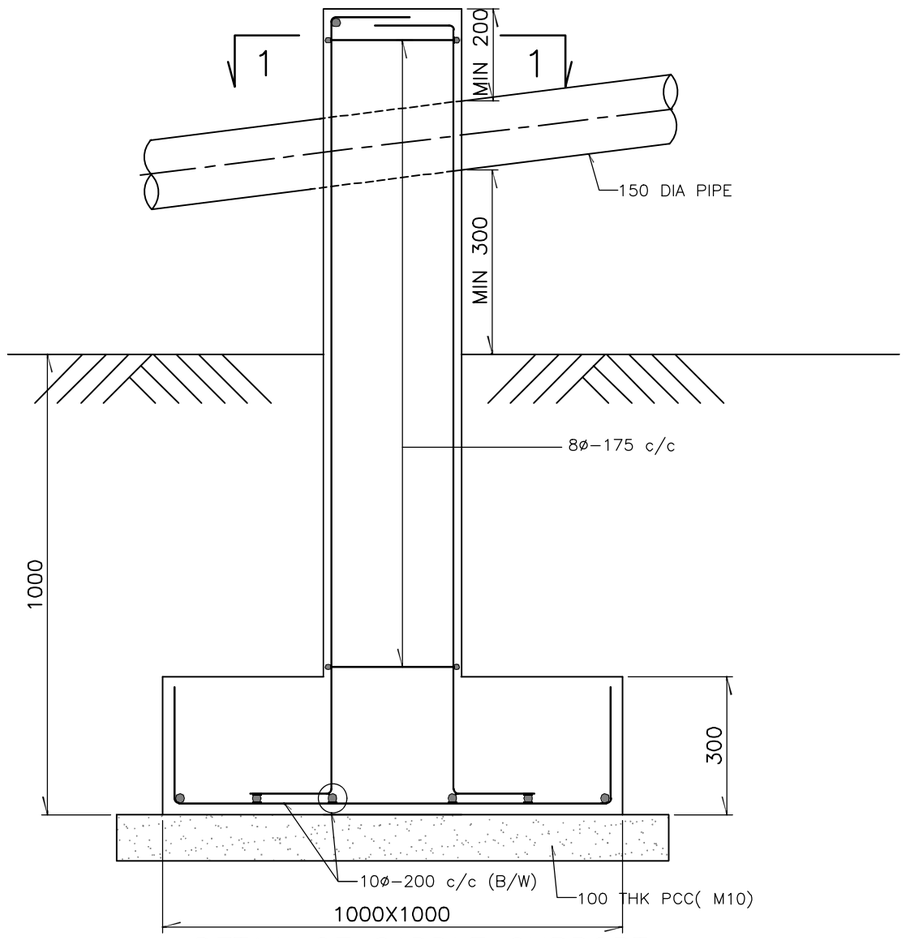

DETAIL OF SADDLE SUPPORT

LEGEND

DIA --- DIAMETER
C/C --- CENTRE TO CENTRE
THK --- THICK
B/W --- BOTHWAYS
PCC --- PLAIN CEMENT CONCRETE
TYP --- TYPICAL

NOTES:

1. ALL DIMENSIONS ARE IN MILLIMETRES AND LEVELS IN METRES UNLESS NOTED.
2. DO NOT SCALE THE DRAWING. FOLLOW FIGURED DIMENSIONS ONLY.
3. GRADE OF CONCRETE SHALL BE M30 WITH MAXIMUM 20mm DOWNGRADED AGGREGATES CONFORMING TO IS 456.
4. STEEL FOR REINFORCEMENT SHALL BE HIGH YIELD STRENGTH DEFORMED BARS OF GRADE FE-500 CONFORMING TO IS:1786.
5. SAFE BEARING CAPACITY OF SOIL IS TAKEN AS 10T/Sq.m. AT FOUNDING LEVEL AND SAME IS TO BE CONFIRMED AT SITE BEFORE EXECUTION.
6. PLAIN CEMENT CONCRETE UNDER FOUNDATION SHALL BE OF GRADE M10 CONFORMING TO IS 456.
7. IF ANY LOOSE SOIL IS ENCOUNTERED AT FOUNDING LEVEL DURING CONSTRUCTION, IT SHOULD BE BROUGHT TO THE NOTICE OF THE ENGINEER.
8. IF GROUND WATER TABLE IS ENCOUNTERED DURING CONSTRUCTION, IT SHOULD BE BROUGHT TO THE NOTICE OF THE ENGINEER FOR MAKING APPROPRIATE CHANGES IN THE DESIGN.
9. THE SPACING OF CONSTRUCTION JOINT SHALL NOT BE MORE THAN 1.20M.

	SIGN.												
	INITIALS												
	REVISIONS												
P0	SIGN.												
	INITIALS	SM	LD/AD	DVP							NMS	NMS	15-04-2022
	REVISIONS												
ISSUE		DRN	DSN	CHD	CV	EL	IC	ME			PE/PM	APPD	DATE (dd-mm-yyyy)
					CLEARED								

'P' (PRELIMINARY) ISSUES ARE NOT TO BE USED FOR CONSTRUCTION / FABRICATION BUT ARE ISSUED FOR LIMITED PURPOSES ONLY AS INDICATED IN THE SMALL BLOCK ABOVE THIS BLOCK.

CONSTRUCTION / FABRICATION WORK IS PERMITTED ON 'R' (RELEASED) ISSUES ONLY.

INFORMATION CONTAINED WITHIN 'HOLD' IS NOT RELEASED FOR CONSTUCTION / FABRICATION. FIELD MUST GET DESIGN OFFICE TO CLEAR 'HOLDS' IN TIME BEFORE PROCEEDING WITH ANY CONSTRUCTION/ FABRICATION WORK RELATED TO 'HOLDS'.

SIGN. OF CLIENT:-

JE	AE	EE	SE

PURPOSE : FOR TENDER ONLY

DO NOT SCALE

Proprietary Notice and Version Control This document contains confidential information for use only by the " Client " ; for the Project under consideration, which is provided for the sole purpose of permitting the recipient to evaluate the information submitted herewith. In consideration of receipt of this document; unless agreed to in contrary in the Contract; the recipient agrees to maintain such information in confidence and to not reproduce or otherwise disclose this information to any persons outside the recipient's organisation; except that there is no obligation to maintain the confidentiality of any information which was known to the recipient prior to receipt of such information from Tata Consulting Engineers Limited, or becomes publicly known through no fault of recipient, or Tata Consulting Engineers Limited, or is received without obligation of confidentiality from a third party owing no obligation of confidentiality to Tata Consulting Engineers Limited. All information given under this version over rides all and any kind of offers, assumptions, deliverables and contracts submitted verbally (and subsequently communicated in writing) or in writing or otherwise given under any and all previous version/s.

FILE NAME 12503A-CV-30583-Rev-P0

DETAILED DESIGN CONSULTANCY, HP-SHIVA (PACKAGE CS09)

IRRIGATION, HORTICULTURE, ORCHARDS AND VALUE CHAIN DEVELOPMENT

TYPICAL DETAIL OF SADDLE SUPPORT

TATA CONSULTING ENGINEERS LIMITED

MUMBAI

SCALE : NTS	DWG NO. TCE.12503A-CV-3082-RC-30583	ISSUE P0	SIZE-A3
DC & DISC : DEL-CV			

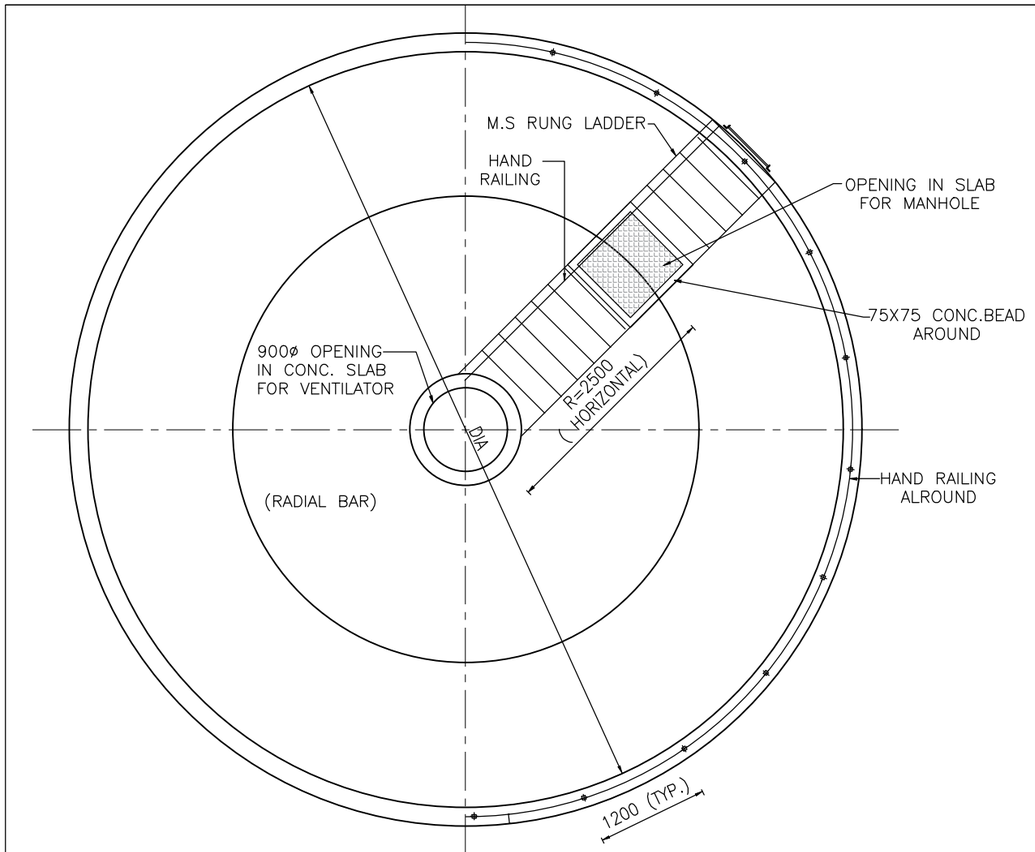

PLAN

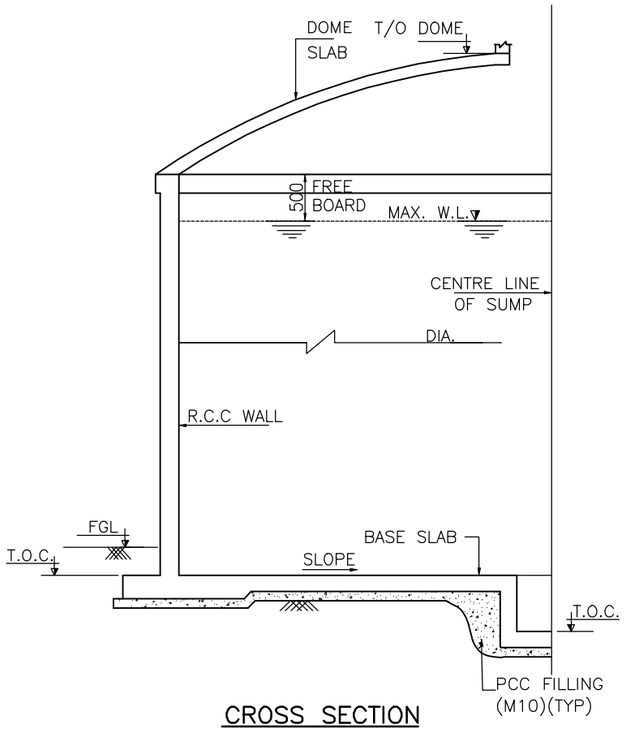

CROSS SECTION

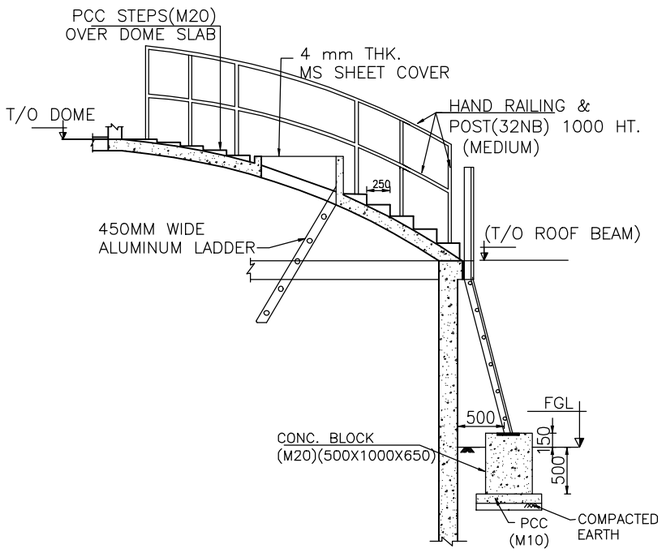

DET.OF STEPS AND M.S.RUNG LADDER

LEGEND

DIA — — — DIAMETER
R — — — RADIUS
PCC — — — PLAIN CEMENT CONCRETE
TYP — — — TYPICAL
WL — — — WATER LEVEL
M.S. — — — MILD STEEL
T/O — — — TOP OF

NOTES

1. ALL DIMENSIONS ARE IN MILLIMETRES AND LEVELS IN METRES UNLESS NOTED.
2. DO NOT SCALE THE DRAWING. FOLLOW FIGURED DIMENSIONS ONLY.
3. GRADE OF CONCRETE SHALL BE M30 WITH MAXIMUM 20mm DOWNGRADED AGGREGATES CONFORMING TO IS 456.
4. STEEL FOR REINFORCEMENT SHALL BE HIGH YIELD STRENGTH DEFORMED BARS OF GRADE FE–500 CONFORMING TO IS:1786.
5. SAFE BEARING CAPACITY OF SOIL IS TAKEN AS 10T/Sq.m. AT FOUNDING LEVEL AND SAME IS TO BE CONFIRMED AT SITE BEFORE EXECUTION.
6. PLAIN CEMENT CONCRETE UNDER FOUNDATION SHALL BE OF GRADE M10 CONFORMING TO IS 456.
7. IF ANY LOOSE SOIL IS ENCOUNTERED AT FOUNDING LEVEL DURING CONSTRUCTION, IT SHOULD BE BROUGHT TO THE NOTICE OF THE ENGINEER.
8. IF GROUND WATER TABLE IS ENCOUNTERED DURING CONSTRUCTION, IT SHOULD BE BROUGHT TO THE NOTICE OF THE ENGINEER FOR MAKING APPROPRIATE CHANGES IN THE DESIGN.
9. THE SPACING OF CONSTRUCTION JOINT SHALL NOT BE MORE THAN 1.20M.

	SIGN.													
	INITIALS													
	REVISIONS													
PO	SIGN.													
	INITIALS	AN	AD	DVP							NMS	NMS	15-04-2022	
	REVISIONS													
ISSUE		DRN	DSN	CHD	CV	EL	IC	ME			PE/PM	APPD	DATE (dd-mm-yyyy)	
					CLEARED									

'P' (PRELIMINARY) ISSUES ARE NOT TO BE USED FOR CONSTRUCTION / FABRICATION BUT ARE ISSUED FOR LIMITED PURPOSES ONLY AS INDICATED IN THE SMALL BLOCK ABOVE THIS BLOCK.

CONSTRUCTION / FABRICATION WORK IS PERMITTED ON 'R' (RELEASED) ISSUES ONLY.

INFORMATION CONTAINED WITHIN 'HOLD' IS NOT RELEASED FOR CONSTUCTION / FABRICATION. FIELD MUST GET DESIGN OFFICE TO CLEAR 'HOLDS' IN TIME BEFORE PROCEEDING WITH ANY CONSTRUCTION/ FABRICATION WORK RELATED TO 'HOLDS'.

SIGN. OF CLIENT:–

JE	AE	EE	SE

PURPOSE : FOR TENDER ONLY

DO NOT SCALE

Proprietary Notice and Version Control This document contains confidential information for use only by the " Client " ; for the Project under consideration, which is provided for the sole purpose of permitting the recipient to evaluate the information submitted herewith. In consideration of receipt of this document; unless agreed to in contrary in the Contract; the recipient agrees to maintain such information in confidence and to not reproduce or otherwise disclose this information to any person outside the recipient's organisation; except that there is no obligation to maintain the confidentiality of any information which was known to the recipient prior to receipt of such information from Tata Consulting Engineers Limited, or becomes publicly known through no fault of recipient, or Tata Consulting Engineers Limited, or is received without obligation of confidentiality from a third party owing no obligation of confidentiality to Tata Consulting Engineers Limited. All information given under this version over rides all and any kind of offers, assumptions, deliverables and contracts submitted verbally (and subsequently communicated in writing) or in writing or otherwise given under any and all previous version/s.

FILE NAME 12503A–CV–30584–Rev–P0

DETAILED DESIGN CONSULTANCY, HP–SHIVA (PACKAGE CS09)

IRRIGATION, HORTICULTURE, ORCHARDS AND VALUE CHAIN DEVELOPMENT

TYPICAL GLSR DETAILS

(1,00,000,1,50,000, 2,00,000, 2,50,000 LITRE CAPACITY)

TATA CONSULTING ENGINEERS LIMITED

MUMBAI

SCALE : NTS	DWG NO. TCE.12503A–CV–3082–GA–30584	ISSUE P0
DC & DISC: DEL–CV		

SIZE–A3

FILE NAME: F–093–Rev–R1.DWG

TCE FORM NO. 093 R1

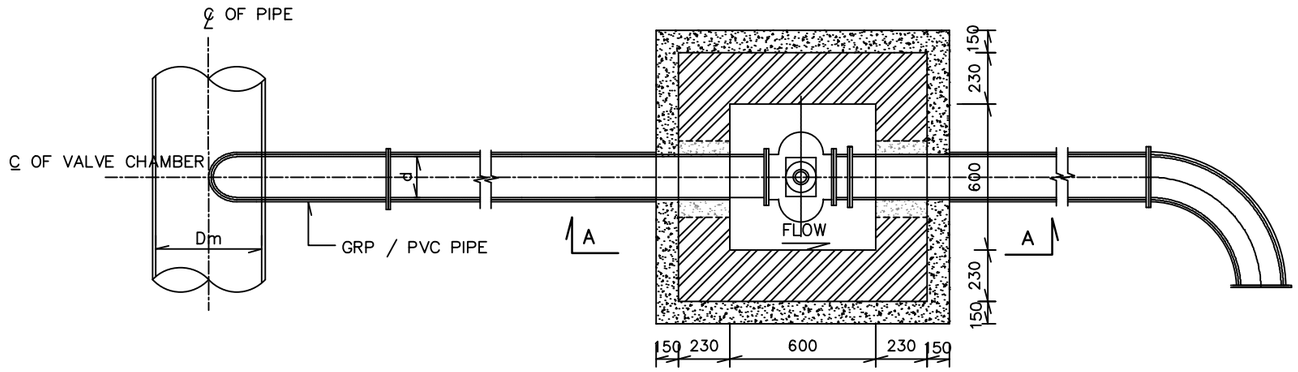

PLAN OF AIR VALVE CHAMBER

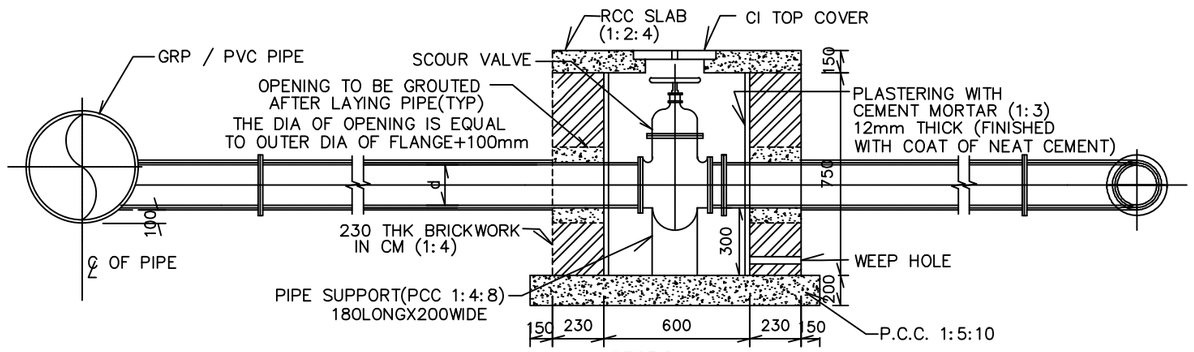

SECTION A–A

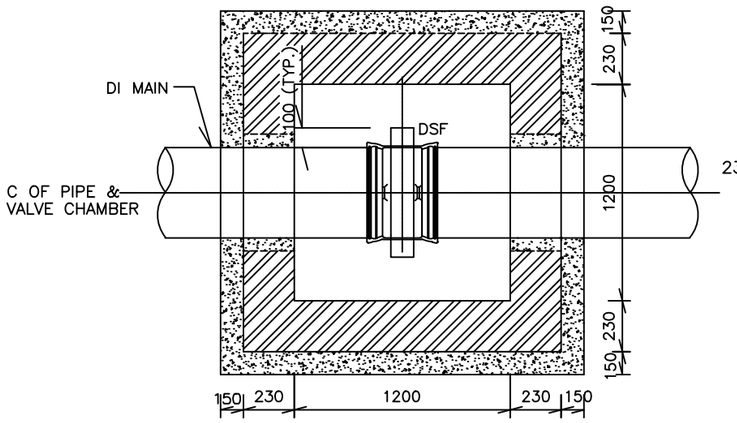

PLAN OF SCOUR VALVE CHAMBER

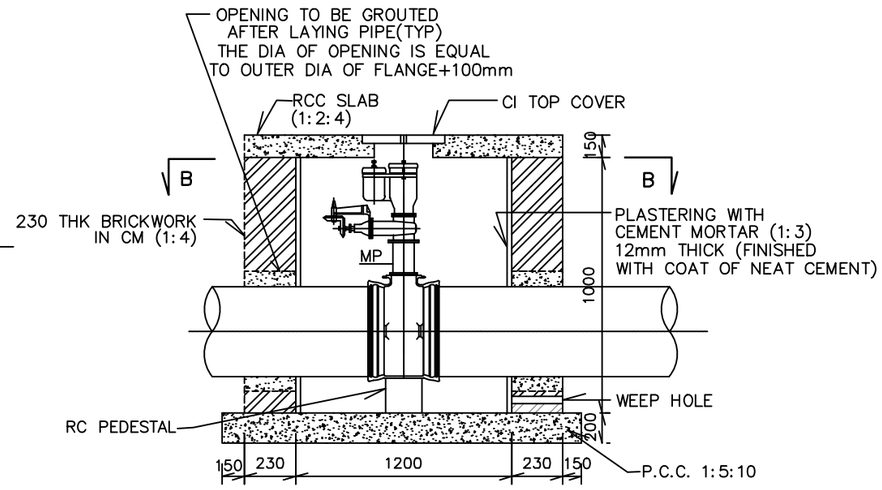

SECTION B–B

LEGEND

RCC	———	REINFORCED CEMENT CONCRETE
PCC	———	PLAIN CEMENT CONCRETE
CI	———	CAST IRON
CM	———	CEMENT MORTAR
THK	———	THICK
PVC	———	POLY VINYL CHLORIDE
Dm/d	———	INTERNAL CLEAR DIAMETER OF PIPELINE
DI	———	DUCTILE IRON
DSF	———	DOUBLE SOCKET FLANGE
℄	———	CENTER LINE
MP	———	MAKEUP PIECE

NOTES

1. ALL DIMENSIONS ARE IN MM. & LEVELS ARE IN METRES.
2. GRADE OF REINFORCEMENT CEMENT CONCRETE SHALL 1:2:4
3. THE ACTUAL GLS AND ILS OF ALL CHAMBERS SHALL BE FIXED BY THE CONTRACTOR IN CONSULTATION WITH THE ENGINEER–IN–CHARGE.
4. EXACT ORIENTATION AND LOCATION OF THE CHAMBERS SHALL BE DECIDED BY THE CONTRACTOR IN CONSULTATION WITH THE ENGINEER–IN–CHARGE.
5. CEMENT SHALL BE ORDINARY PORTLAND TYPE CONFORMING TO IS:269 UN,
6. MAXIMUM SIZE OF AGGREGATES SHALL BE 20mm DOWNGRADED FOR RAFT, WALLS, BEAMS AND SLABS.
7. BACKFILLING AROUND WALLS TO BE DONE UNIFORMLY ALL ROUND IN SUCCESSIVE LIFTS OF EQUAL HEIGHT AS PER SPECIFICATION BACKFILLING SHALL BE DONE ONLY WHEN WHEN DIRECTED BY ENGINEER.
8. ALL CONCRETE WORK SHALL BE IN ACCORDANCE WITH TENDER SPECIFICATION.
9. CHAMBER TO BE PLASTERED INTERNALLY WITH CEMENT MORTAR 1:3 IN 12MM THICKNESS.
10. GRADE OF CONCRETE SHALL BE M20 WITH MAXIMUM 20mm DOWN GRADED AGGREGATES CONFORMING TO SPECIFICATION.
11. FOR LOCATION OF VALVE CHAMBERS REFER NETWORK DISTRIBUTION DRAWING. THE CONTRACTOR SHALL OBTAIN ENGINEER'S APPROVAL FOR ALL VALVE CHAMBER LOCATIONS AND LEVELS BEFORE EXECUTION.
12. THE ARRANGEMENT RELATED TO VALVE AND FITTINGS SHOWN IN THE DRAWING ARE INDICATIVE ONLY. BEFORE CONSTRUCTION, ARRANGEMENT OF VALVE & FITTINGS SHALL BE PROVIDED BY THE CONTRACTOR TO ENGINEER FOR APPROVAL.

	SIGN.													
	INITIALS													
	REVISIONS													
	SIGN.													
P0	INITIALS	SM	MJ	DVP							NMS	NMS		15-04-2022
	REVISIONS													
ISSUE		DRN	DSN	CHD	CV	EL	IC	ME			PE/PM	APPD	DATE (dd-mm-yyyy)	
					CLEARED									

'P' (PRELIMINARY) ISSUES ARE NOT TO BE USED FOR CONSTRUCTION / FABRICATION BUT ARE ISSUED FOR LIMITED PURPOSES ONLY AS INDICATED IN THE SMALL BLOCK ABOVE THIS BLOCK.

CONSTRUCTION / FABRICATION WORK IS PERMITTED ON 'R' (RELEASED) ISSUES ONLY.

INFORMATION CONTAINED WITHIN 'HOLD' IS NOT RELEASED FOR CONSTUCTION / FABRICATION. FIELD MUST GET DESIGN OFFICE TO CLEAR 'HOLDS' IN TIME BEFORE PROCEEDING WITH ANY CONSTRUCTION/ FABRICATION WORK RELATED TO 'HOLDS'.

SIGN. OF CLIENT:–

JE	AE	EE	SE

PURPOSE : FOR TENDER ONLY

DO NOT SCALE

Proprietary Notice and Version Control This document contains confidential information for use only by the "Client"; for the Project under consideration, which is provided for the sole purpose of permitting the recipient to evaluate the information submitted herewith. In consideration of receipt of this document; unless agreed to to contrary in the Contract; the recipient agrees to maintain such information in confidence and to not reproduce or otherwise disclose this information to any persons outside the recipient's organisation; except that there is no obligation to maintain the confidentiality of any information which was known to the recipient prior to receipt of such information from Tata Consulting Engineers Limited, or becomes publicly known through no fault of recipient, or Tata Consulting Engineers Limited, or is received without obligation of confidentiality from a third party owing no obligation of confidentiality to Tata Consulting Engineers Limited. All information given under this version over rides all and any kind of offers, assumptions, deliverables and contracts submitted verbally (and subsequently communicated in writing) or in writing or otherwise given under any and all previous version/s.

FILE NAME 12503A–CV–30585–Rev–P0

DETAILED DESIGN CONSULTANCY, HP–SHIVA (PACKAGE CS09)

IRRIGATION, HORTICULTURE, ORCHARDS AND VALUE CHAIN DEVELOPMENT

TYPICAL DETAILS OF SCOUR VALVE AND AIR VALVE CHAMBER

TATA CONSULTING ENGINEERS LIMITED

MUMBAI

SCALE : NTS	DWG NO. TCE.12503A–CV–3082–WS–30585	ISSUE P0
DC & DISC: DEL–CV		

SIZE–A3

FILE NAME: F–093–Rev–R1.DWG

TCE FORM NO. 093 R1

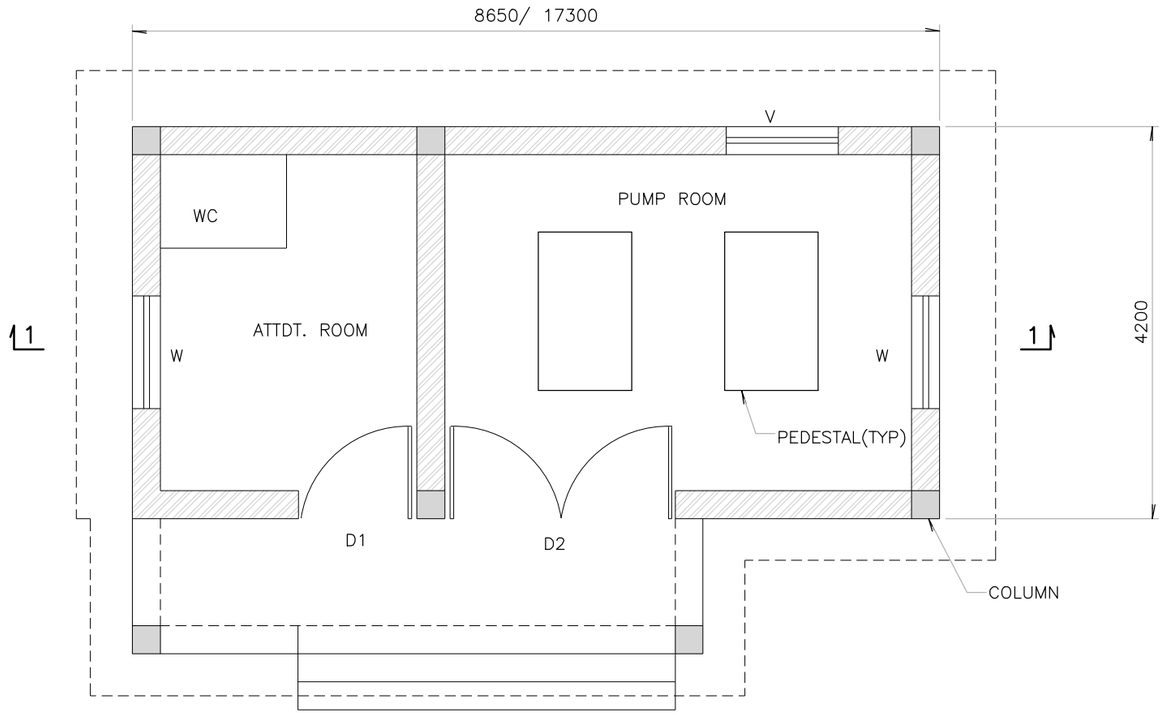

PLAN

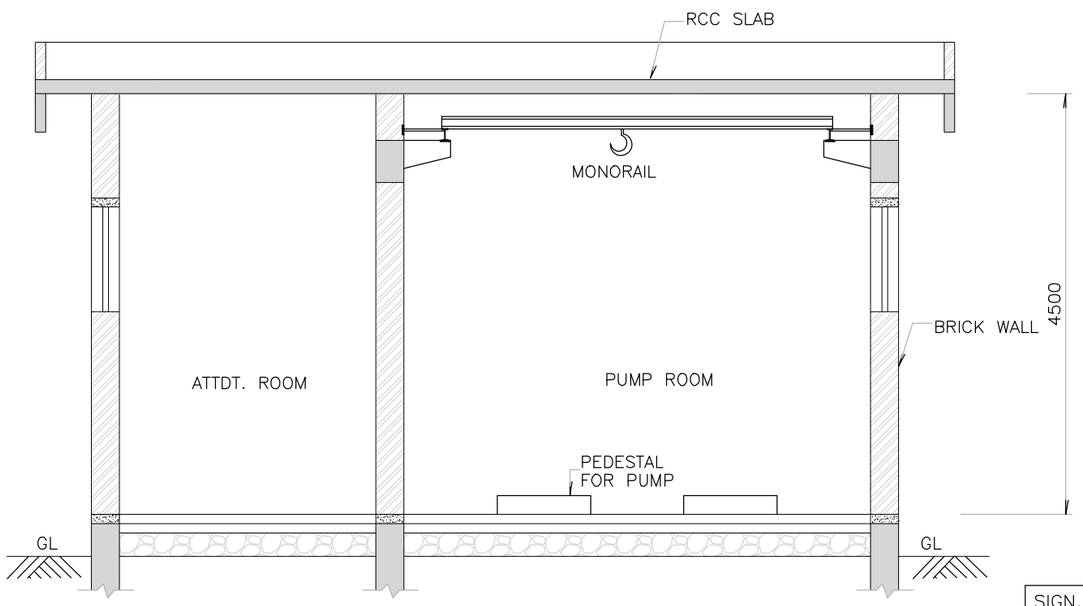

SECTION 1–1

LEGEND

ATTDT. — — — ATTENDANT
RCC — — — REINFORCED CEMENT CONCRETE
TYP — — — TYPICAL
GL — — — GROUND LEVEL

NOTES

1. ALL DIMENSIONS ARE IN MILLIMETRES AND LEVELS IN METRES UNLESS NOTED.
2. DO NOT SCALE THE DRAWING. FOLLOW FIGURED DIMENSIONS ONLY.
3. GRADE OF CONCRETE SHALL BE M20 WITH MAXIMUM 20mm DOWNGRADED AGGREGATES CONFORMING TO IS 456.
4. SAFE BEARING CAPACITY OF SOIL IS TAKEN AS 10T/Sq.m. AT FOUNDING LEVEL AND SAME IS TO BE CONFIRMED AT SITE BEFORE EXECUTION.
5. PLAIN CEMENT CONCRETE UNDER FOUNDATION SHALL BE OF GRADE M10 CONFORMING TO IS 456.
6. IF ANY LOOSE SOIL IS ENCOUNTERED AT FOUNDING LEVEL DURING CONSTRUCTION, IT SHOULD BE BROUGHT TO THE NOTICE OF THE ENGINEER.
7. IF GROUND WATER TABLE IS ENCOUNTERED DURING CONSTRUCTION, IT SHOULD BE BROUGHT TO THE NOTICE OF THE ENGINEER FOR MAKING APPROPRIATE CHANGES IN THE DESIGN.
8. THE SPACING OF CONSTRUCTION JOINT SHALL NOT BE MORE THAN 1.20M.

P1	SIGN.												08-06-2022
	INITIALS	SM	AD	DVB							MK	DK	
	REVISIONS												
P0	SIGN.												15-04-2022
	INITIALS	SM	LD/AD	DVB							MK	DK	
	REVISIONS												
ISSUE		DRN	DSN	CHD	CV	EL	IC	ME			PE/PM	APPD	DATE (dd-mm-yyyy)
					CLEARED								

'P' (PRELIMINARY) ISSUES ARE NOT TO BE USED FOR CONSTRUCTION / FABRICATION BUT ARE ISSUED FOR LIMITED PURPOSES ONLY AS INDICATED IN THE SMALL BLOCK ABOVE THIS BLOCK.

CONSTRUCTION / FABRICATION WORK IS PERMITTED ON 'R' (RELEASED) ISSUES ONLY.

INFORMATION CONTAINED WITHIN 'HOLD' IS NOT RELEASED FOR CONSTUCTION / FABRICATION. FIELD MUST GET DESIGN OFFICE TO CLEAR 'HOLDS' IN TIME BEFORE PROCEEDING WITH ANY CONSTRUCTION/ FABRICATION WORK RELATED TO 'HOLDS'.

SIGN. OF CLIENT:–

JE	AE	EE	SE

PURPOSE : FOR TENDER ONLY

DO NOT SCALE

Proprietary Notice and Version Control This document contains confidential information For use only by the "Client"; for the Project under consideration, which is provided for the sole purpose of permitting the recipient to evaluate the information submitted herewith. In consideration of receipt of this document; unless agreed to in contrary in the Contract; the recipient agrees to maintain such information in confidence and to not reproduce or otherwise disclose this information to any person outside the recipient's organisation; except that there is no obligation to maintain the confidentiality of any information which was known to the recipient prior to receipt of such information from Tata Consulting Engineers Limited, or becomes publicly known through no fault of recipient, or Tata Consulting Engineers Limited, or is received without obligation of confidentiality from a third party owing no obligation of confidentiality to Tata Consulting Engineers Limited. All information given under this version over rides all and any kind of offers, assumptions, deliverables and contracts submitted verbally (and subsequently communicated in writing) or in writing or otherwise given under any and all previous version/s.

FILE NAME 12503A–CV–30586–Rev–P1

DETAILED DESIGN CONSULTANCY, HP–SHIVA (PACKAGE CS09)

IRRIGATION, HORTICULTURE, ORCHARDS AND VALUE CHAIN DEVELOPMENT

TYPICAL DETAILS OF PUMP HOUSE

TATA CONSULTING ENGINEERS LIMITED

MUMBAI

SCALE : NTS	DWG NO. TCE.12503A–CV–3082–GA–30586	ISSUE P1	SIZE–A3
DC & DISC : DEL–CV			

FILE NAME: F-093-Rev-R1.DWG

TCE FORM NO. 093 R1

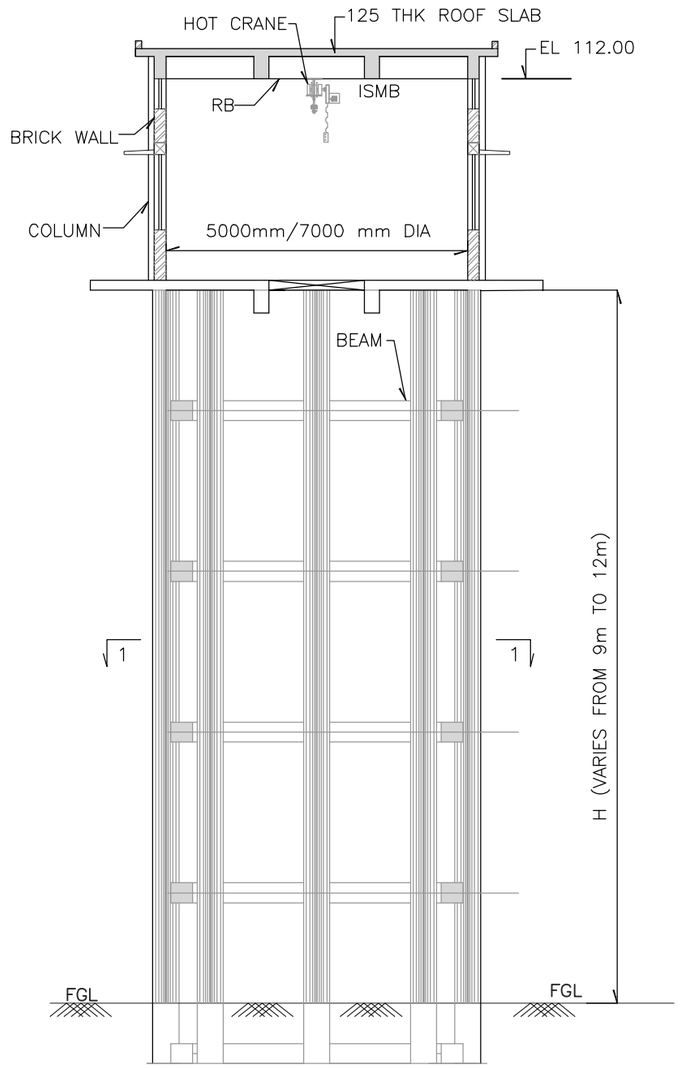

SECTION ELEVATION

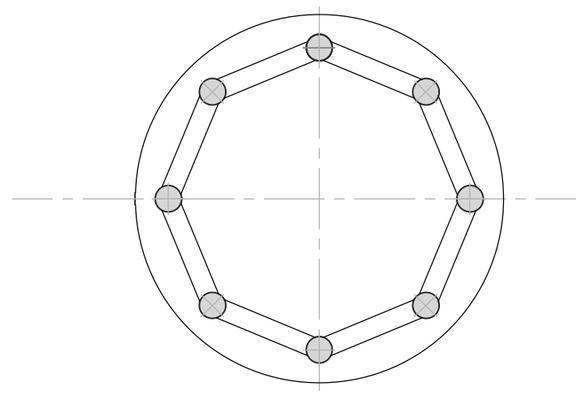

SECTIONAL PLAN
SEC 1–1

LEGEND:

DIA---- DIAMETER
H----- STAGE HEIGHT
THK---- THICKNESS
FGL-----FINISHED GROUND LEVEL
RB----- ROOF BEAM

NOTES:

1. ALL DIMENSIONS ARE IN MILLIMETRES AND LEVELS IN METRES UNLESS NOTED.
2. DO NOT SCALE THE DRAWING. FOLLOW FIGURED DIMENSIONS ONLY.
3. GRADE OF CONCRETE SHALL BE M30 WITH MAXIMUM 20mm DOWNGRADED AGGREGATES CONFORMING TO IS 456.
4. STEEL FOR REINFORCEMENT SHALL BE HIGH YIELD STRENGTH DEFORMED BARS OF GRADE FE–500 CONFORMING TO IS:1786.
5. SAFE BEARING CAPACITY OF SOIL IS TAKEN AS 10T/Sq.m. AT FOUNDING LEVEL AND SAME IS TO BE CONFIRMED AT SITE BEFORE EXECUTION.
6. PLAIN CEMENT CONCRETE UNDER FOUNDATION SHALL BE OF GRADE M10 CONFORMING TO IS 456.
7. IF ANY LOOSE SOIL IS ENCOUNTERED AT FOUNDING LEVEL DURING CONSTRUCTION, IT SHOULD BE BROUGHT TO THE NOTICE OF THE ENGINEER.
8. IF GROUND WATER TABLE IS ENCOUNTERED DURING CONSTRUCTION, IT SHOULD BE BROUGHT TO THE NOTICE OF THE ENGINEER FOR MAKING APPROPRIATE CHANGES IN THE DESIGN.
9. THE SPACING OF CONSTRUCTION JOINT SHALL NOT BE MORE THAN 1.20M.

P1	SIGN.												27-05-2022
	INITIALS	SM	LD/AD	DVP							NMS	NMS	
	REVISIONS	AS PER CLIENT OBSERVATION											
P0	SIGN.												15-04-2022
	INITIALS	SM	LD/AD	DVP							NMS	NMS	
	REVISIONS												
ISSUE		DRN	DSN	CHD	CV	EL	IC	ME			PE/PM	APPD	DATE (dd-mm-yyyy)
					CLEARED								

'P' (PRELIMINARY) ISSUES ARE NOT TO BE USED FOR CONSTRUCTION / FABRICATION BUT ARE ISSUED FOR LIMITED PURPOSES ONLY AS INDICATED IN THE SMALL BLOCK ABOVE THIS BLOCK.

CONSTRUCTION / FABRICATION WORK IS PERMITTED ON 'R' (RELEASED) ISSUES ONLY.

INFORMATION CONTAINED WITHIN 'HOLD' IS NOT RELEASED FOR CONSTUCTION / FABRICATION. FIELD MUST GET DESIGN OFFICE TO CLEAR 'HOLDS' IN TIME BEFORE PROCEEDING WITH ANY CONSTRUCTION/ FABRICATION WORK RELATED TO 'HOLDS'.

SIGN. OF CLIENT:–

JE	AE	EE	SE

PURPOSE : FOR TENDER ONLY

DO NOT SCALE

Proprietary Notice and Version Control This document contains confidential information for use only by the " Client " ; for the Project under consideration, which is provided for the sole purpose of permitting the recipient to evaluate the information submitted herewith. In consideration of receipt of this document; unless agreed to in contrary in the Contract; the recipient agrees to maintain such information in confidence and to not reproduce or otherwise disclose this information to any person outside the recipient's organisation; except that there is no obligation to maintain the confidentiality of any information which was known to the recipient prior to receipt of such information from Tata Consulting Engineers Limited, or becomes publicly known through no fault of recipient, or Tata Consulting Engineers Limited, or is received without obligation of confidentiality from a third party owing no obligation of confidentiality to Tata Consulting Engineers Limited. All information given under this version over rides all and any kind of offers, assumptions, deliverables and contracts submitted verbally (and subsequently communicated in writing) or in writing or otherwise given under any and all previous version/s.

FILE NAME 12503A–CV–30587–Rev–P1

DETAILED DESIGN CONSULTANCY, HP–SHIVA (PACKAGE CS09)

IRRIGATION, HORTICULTURE, ORCHARDS AND VALUE CHAIN DEVELOPMENT

GENERAL ARRANGEMENT OF INTAKE WELL

TATA CONSULTING ENGINEERS LIMITED
MUMBAI

SCALE : NTS	DWG NO. TCE.12503A–CV–3082–GA–30587	ISSUE P1
DC & DISC: DEL–CV		

SIZE–A3

FILE NAME: F–093–Rev–R1.DWG

TCE FORM NO. 093 R1

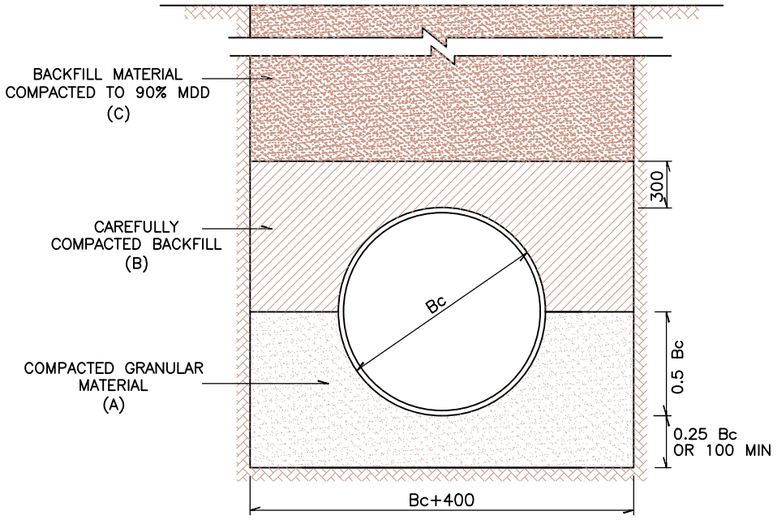

GRANULAR BEDDING (GRB)
CLASS–B

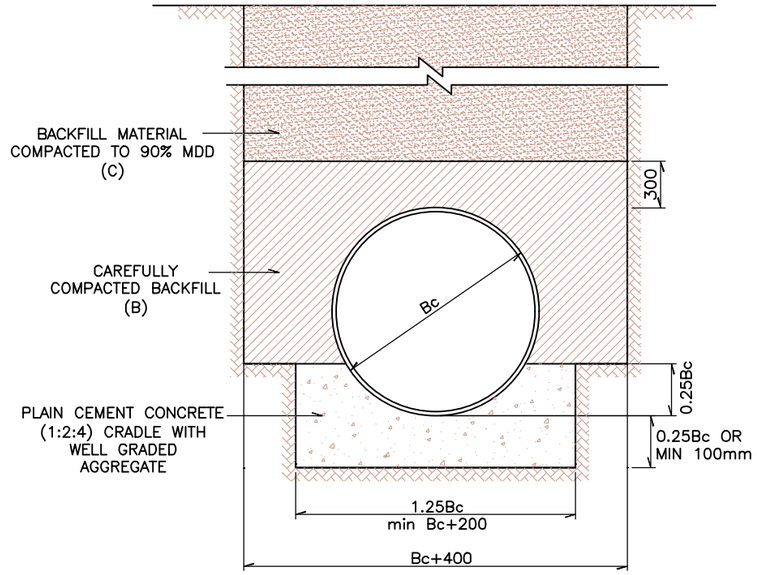

PLAIN CEMENT CONCRETE BEDDING (PCCB)
CLASS–Ab

LEGEND:

GL	GROUND LEVEL
C.M.	CEMENT MORTAR
TYP	TYPICAL
MAX	MAXIMUM
DIA	DIAMETER
THK	THICK
MS	MILD STEEL
Bc	OUTER DIAMETER OF PIPE
d	INTERNAL DIAMETER OF PIPE

NOTES:

1. ALL DIMENSIONS ARE IN MILLIMETERS UNLESS OTHERWISE INDICATED.
2. INTERNAL DIAMETER OF PIPE = D
3. OUTER DIAMETER OF PIPE = Bc.
4. BACKFILLING WITH APPROVED SELECTED EXCAVATED MATERIAL AND COMPACTION SHALL BE DONE BY HAND OR APPROVED MECHANICAL METHODS IN LAYERS OF 150mm WITH SPECIAL CARE TO AVOID DAMAGE OF THE PIPE
5. BACKFILLING SHALL BE DONE WITH EXCAVATED MATERIAL BY HAND OR APPROVED MECHANICAL METHODS IN LAYERS NOT EXCEEDING 150 MM THICKNESS AFTER COMPACTING, WETTED AND COMPACTED TO A DENSITY OF NOT LESS THAN 90% OF MAXIMUM DRY DENSITY AT OPTIMUM MOISTURE CONTENT OF THE SURROUNDING MATERIAL.
6. LAYER A. COMPACTED GRANULAR MATERIAL
7. LAYER B. CAREFULLY COMPACTED BACKFILL
8. LAYER C. BACKFILL MATERIAL COMPACTED TO 90% M.D.D

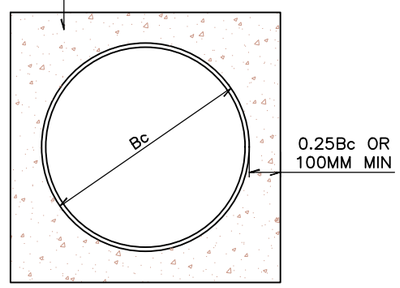

CONCRETE ENCASEMENT

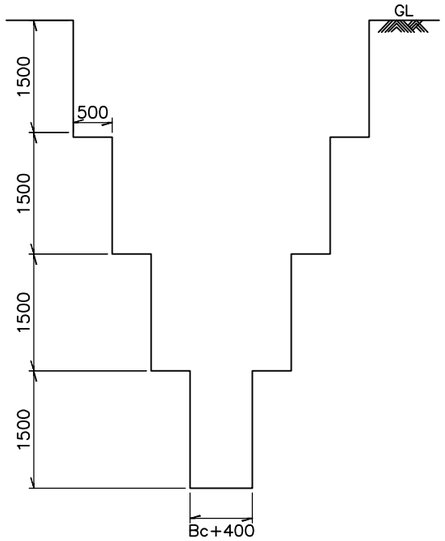

TYPICAL SECTION OF TRENCH

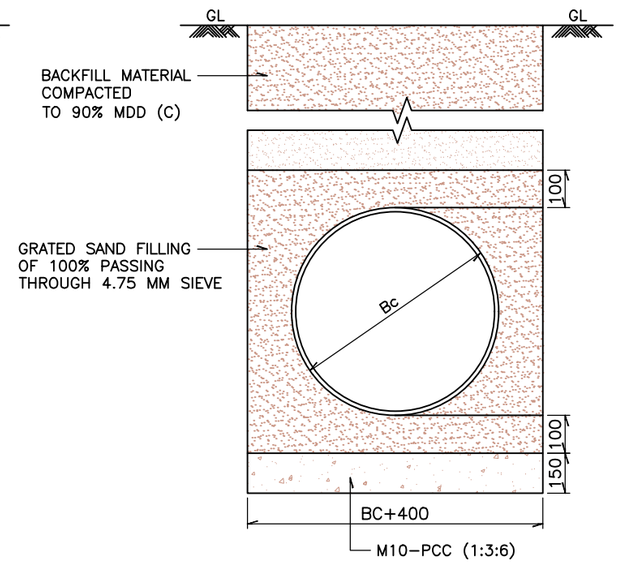

SAND BEDDING (SB) CLASS–S

DETAILED DESIGN CONSULTANCY, HP–SHIVA (PACKAGE CS09)

IRRIGATION, HORTICULTURE, ORCHARDS AND VALUE CHAIN DEVELOPMENT

TYPICAL DETAILS OF BEDDING AND TRENCH

SIGN. OF CLIENT:–

JE	AE	EE	SE

PURPOSE : FOR TENDER ONLY

DO NOT SCALE

Proprietary Notice and Version Control This document contains confidential information for use only by the " Client " ; for the Project under consideration, which is provided for the sole purpose of permitting the recipient to evaluate the information submitted herewith. In consideration of receipt of this document; unless agreed to in contrary in the Contract; the recipient agrees to maintain such information in confidence and to not reproduce or otherwise disclose this information to any person outside the recipient's organisation; except that there is no obligation to maintain the confidentiality of any information which was known to the recipient prior to receipt of such information from Tata Consulting Engineers Limited, or becomes publicly known through no fault of recipient, or Tata Consulting Engineers Limited, or is received without obligation of confidentiality from a third party owing no obligation of confidentiality to Tata Consulting Engineers Limited. All information given under this version over rides all and any kind of offers, assumptions, deliverables and contracts submitted verbally (and subsequently communicated in writing) or in writing or otherwise given under any and all previous version/s.

ISSUE		DRN	DSN	CHD	CV	EL	IC	ME			PE/PM	APPD	DATE (dd-mm-yyyy)
	SIGN.												
	INITIALS												
	REVISIONS												
P0	SIGN.												
	INITIALS	SM	MJ	DVP							NMS	NMS	15-04-2022
	REVISIONS												
					CLEARED								

'P' (PRELIMINARY) ISSUES ARE NOT TO BE USED FOR CONSTRUCTION / FABRICATION BUT ARE ISSUED FOR LIMITED PURPOSES ONLY AS INDICATED IN THE SMALL BLOCK ABOVE THIS BLOCK.

CONSTRUCTION / FABRICATION WORK IS PERMITTED ON 'R' (RELEASED) ISSUES ONLY.

INFORMATION CONTAINED WITHIN 'HOLD' IS NOT RELEASED FOR CONSTUCTION / FABRICATION. FIELD MUST GET DESIGN OFFICE TO CLEAR 'HOLDS' IN TIME BEFORE PROCEEDING WITH ANY CONSTRUCTION/ FABRICATION WORK RELATED TO 'HOLDS'.

FILE NAME 12503A–CV–30588–Rev–P0

TATA CONSULTING ENGINEERS LIMITED

MUMBAI

SCALE : NTS	DWG NO. TCE.12503A–CV–3082–WS–30588	ISSUE P0
DC & DISC: DEL–CV		

SIZE–A3

FILE NAME: F–093–Rev–R1.DWG

TCE FORM NO. 093 R1

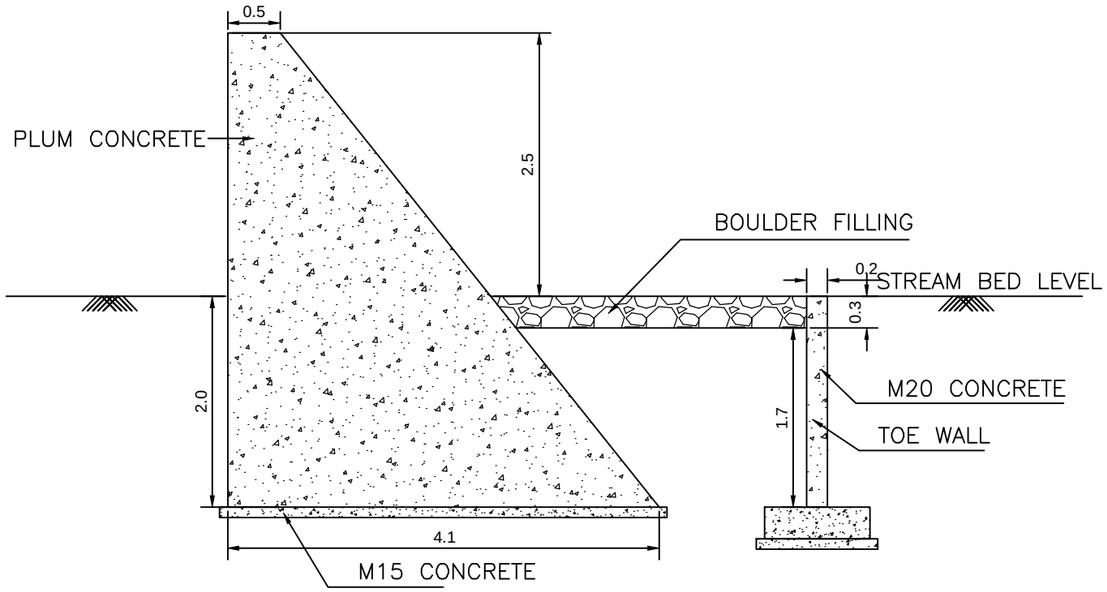

SECTION 1–1

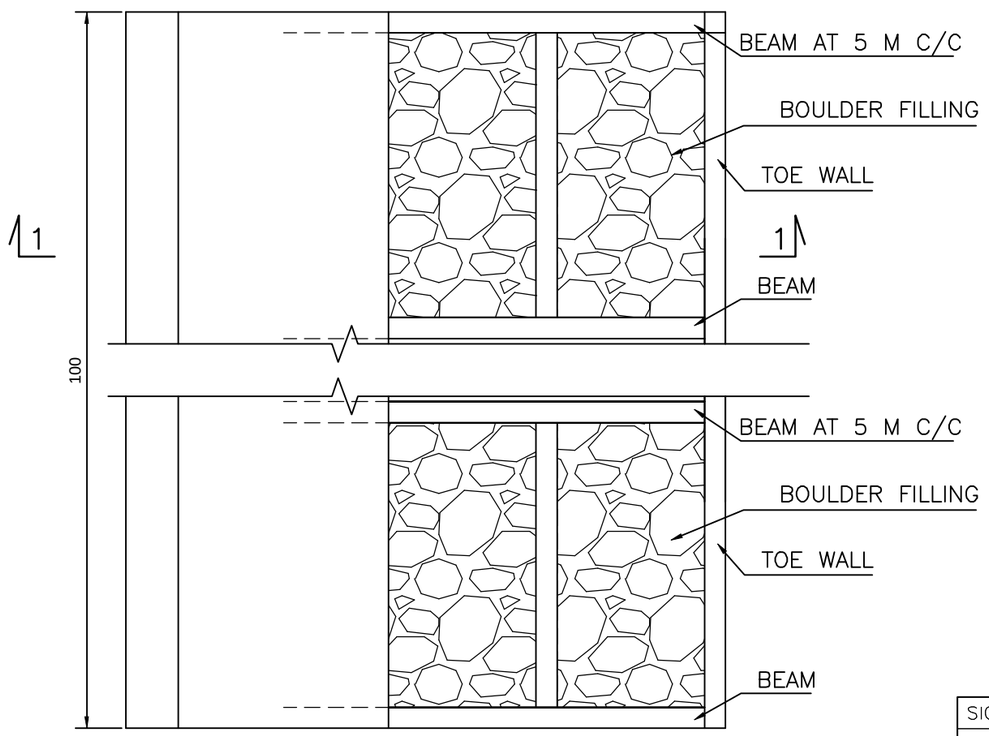

PLAN

NOTES

1. ALL DIMENSIONS ARE IN METER.
2. THIS DRAWING HAS BEEN PREPARED IN ABSENCE OF DETAILED SURVEY AND GEOTECHNICAL INVESTIGATION WORKS. FOUNDATION IS ASSUMED AT 2M BELOW BED LEVEL

	SIGN.													
	INITIALS													
	REVISIONS													
	SIGN.													
P0	INITIALS	SM	DVB	DVB							MK	MK	18-04-2022	
	REVISIONS													
ISSUE		DRN	DSN	CHD	CV	EL	IC	ME			PE/PM	APPD	DATE (dd-mm-yyyy)	
					CLEARED									

'P' (PRELIMINARY) ISSUES ARE NOT TO BE USED FOR CONSTRUCTION / FABRICATION BUT ARE ISSUED FOR LIMITED PURPOSES ONLY AS INDICATED IN THE SMALL BLOCK ABOVE THIS BLOCK.

CONSTRUCTION / FABRICATION WORK IS PERMITTED ON 'R' (RELEASED) ISSUES ONLY.

INFORMATION CONTAINED WITHIN 'HOLD' IS NOT RELEASED FOR CONSTUCTION / FABRICATION. FIELD MUST GET DESIGN OFFICE TO CLEAR 'HOLDS' IN TIME BEFORE PROCEEDING WITH ANY CONSTRUCTION/ FABRICATION WORK RELATED TO 'HOLDS'.

SIGN. OF CLIENT:–

JE	AE	EE	SE

PURPOSE : FOR TENDER ONLY

DO NOT SCALE

Proprietary Notice and Version Control This document contains confidential information for use only by the " Client " ; for the Project under consideration, which is provided for the sole purpose of permitting the recipient to evaluate the information submitted herewith. In consideration of receipt of this document; unless agreed to to contrary in the Contract; the recipient agrees to maintain such information in confidence and to not reproduce or otherwise disclose this information to any person outside the recipient's organization; except that there is no obligation to maintain the confidentiality of any information which was known to the recipient prior to receipt of such information from Tata Consulting Engineers Limited, or becomes publicly known through no fault of recipient, or Tata Consulting Engineers Limited, or is received without obligation of confidentiality from a third party owing no obligation of confidentiality to Tata Consulting Engineers Limited. All information given under this version over rides all and any kind of offers, assumptions, deliverables and contracts submitted verbally (and subsequently communicated in writing) or in writing or otherwise given under any and all previous version/s.

FILE NAME 12503A–CV–30589–Rev–P0

DETAILED DESIGN CONSULTANCY, HP–SHIVA (PACKAGE CS09)

IRRIGATION, HORTICULTURE, ORCHARDS AND VALUE CHAIN DEVELOPMENT

GENERAL ARRANGEMENT OF CHECK DAM

TATA CONSULTING ENGINEERS LIMITED

MUMBAI

SCALE : NTS	DWG NO. TCE.12503A–CV–3082–GA–30589	ISSUE P0
DC & DISC : DEL–CV		

SIZE-A3

FILE NAME: F-093-Rev-R1.DWG

TCE FORM NO. 093 R1

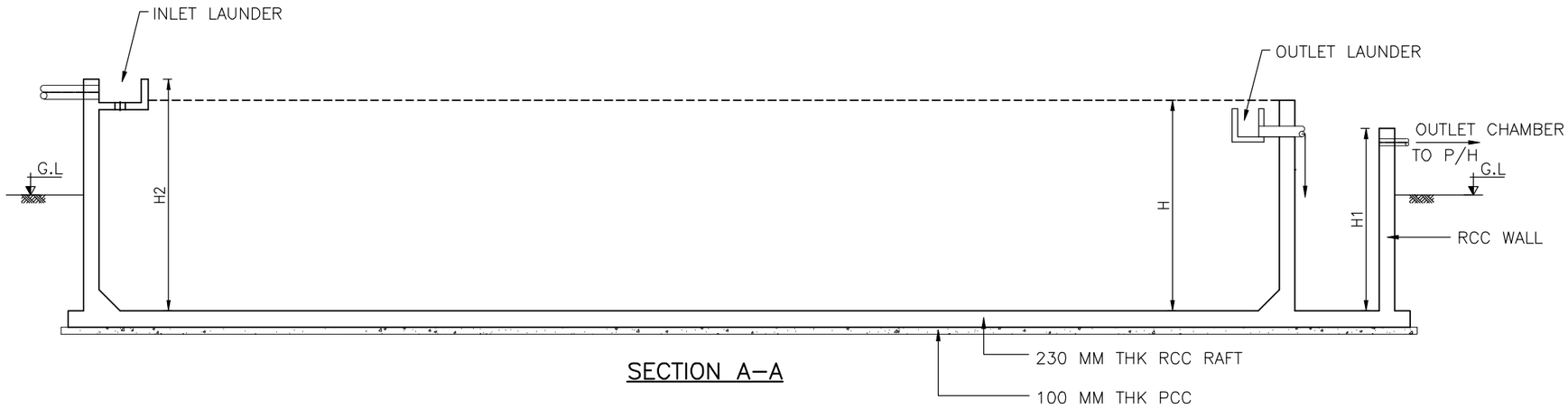

SECTION A–A

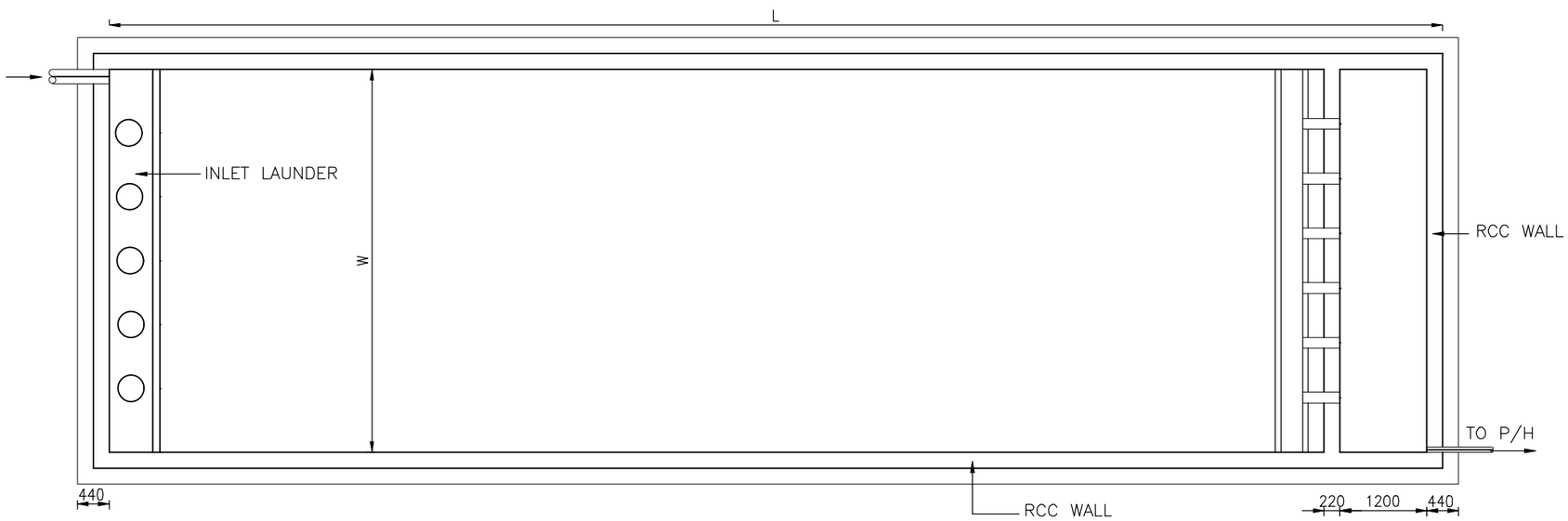

PLAN

LEGEND

P/H	– – –	PUMP HOUSE
THK	– – –	THICK
PCC	– – –	PLAIN CEMENT CONCRETE
RCC	– – –	REINFORCED CEMENT CONCRETE
G.L.	– – –	GROUND LEVEL
L	– – –	LENGTH OF TANK
W	– – –	WIDTH OF TANK
H	– – –	HEIGHT OF TANK

1. ALL DIMENSIONS ARE IN MILLIMETRES AND LEVELS IN METRES UNLESS NOTED.
2. DO NOT SCALE THE DRAWING. FOLLOW FIGURED DIMENSIONS ONLY.
3. GRADE OF CONCRETE SHALL BE M30 WITH MAXIMUM 20mm DOWNGRADED AGGREGATES CONFORMING TO IS 456.
4. STEEL FOR REINFORCEMENT SHALL BE HIGH YIELD STRENGTH DEFORMED BARS OF GRADE FE–500 CONFORMING TO IS:1786.
5. SAFE BEARING CAPACITY OF SOIL IS TAKEN AS 10T/Sq.m. AT FOUNDING LEVEL AND SAME IS TO BE CONFIRMED AT SITE BEFORE EXECUTION.
6. PLAIN CEMENT CONCRETE UNDER FOUNDATION SHALL BE OF GRADE M10 CONFORMING TO IS 456.
7. IF ANY LOOSE SOIL IS ENCOUNTERED AT FOUNDING LEVEL DURING CONSTRUCTION, IT SHOULD BE BROUGHT TO THE NOTICE OF THE ENGINEER.
8. IF GROUND WATER TABLE IS ENCOUNTERED DURING CONSTRUCTION, IT SHOULD BE BROUGHT TO THE NOTICE OF THE ENGINEER FOR MAKING APPROPRIATE CHANGES IN THE DESIGN.
9. THE SPACING OF CONSTRUCTION JOINT SHALL NOT BE MORE THAN 1.20M.

ISSUE		DRN	DSN	CHD	CV	EL	IC	ME			PE/PM	APPD	DATE (dd-mm-yyyy)
	SIGN.												
	INITIALS												
	REVISIONS												
P0	SIGN.												
	INITIALS	AD	MJ	DVP							NMS	NMS	15-04-2022
	REVISIONS												
					CLEARED								

'P' (PRELIMINARY) ISSUES ARE NOT TO BE USED FOR CONSTRUCTION / FABRICATION BUT ARE ISSUED FOR LIMITED PURPOSES ONLY AS INDICATED IN THE SMALL BLOCK ABOVE THIS BLOCK.

CONSTRUCTION / FABRICATION WORK IS PERMITTED ON 'R' (RELEASED) ISSUES ONLY.

INFORMATION CONTAINED WITHIN 'HOLD' IS NOT RELEASED FOR CONSTUCTION / FABRICATION. FIELD MUST GET DESIGN OFFICE TO CLEAR 'HOLDS' IN TIME BEFORE PROCEEDING WITH ANY CONSTRUCTION/ FABRICATION WORK RELATED TO 'HOLDS'.

SIGN. OF CLIENT:–

JE	AE	EE	SE

PURPOSE : FOR TENDER ONLY

DO NOT SCALE

Proprietary Notice and Version Control This document contains confidential information For use only by the "Client"; for the Project under consideration, which is provided for the sole purpose of permitting the recipient to evaluate the information submitted herewith. In consideration of receipt of this document; unless agreed to in contrary in the Contract; the recipient agrees to maintain such information in confidence and to not reproduce or otherwise disclose this information to any person outside the recipient's organisation; except that there is no obligation to maintain the confidentiality of any information which was known to the recipient prior to receipt of such information from Tata Consulting Engineers Limited, or becomes publicly known through no fault of recipient, or Tata Consulting Engineers Limited, or is received without obligation of confidentiality from a third party owing no obligation of confidentiality to Tata Consulting Engineers Limited. All information given under this version over rides all and any kind of offers, assumptions, deliverables and contracts submitted verbally (and subsequently communicated in writing) or in writing or otherwise given under any and all previous version/s.

FILE NAME 12503A–CV–30590–Rev–P0

DETAILED DESIGN CONSULTANCY, HP–SHIVA (PACKAGE CS09)

IRRIGATION, HORTICULTURE, ORCHARDS AND VALUE CHAIN DEVELOPMENT

TYPICAL DETAILS OF DESILTING TANK

TATA CONSULTING ENGINEERS LIMITED

MUMBAI

SCALE	DWG NO.	ISSUE
: NTS	TCE.12503A–CV–3082–GA–30590	P0
DC & DISC : DEL–CV		

SIZE–A3

FILE NAME: F–093–Rev–R1.DWG

TCE FORM NO. 093 R1

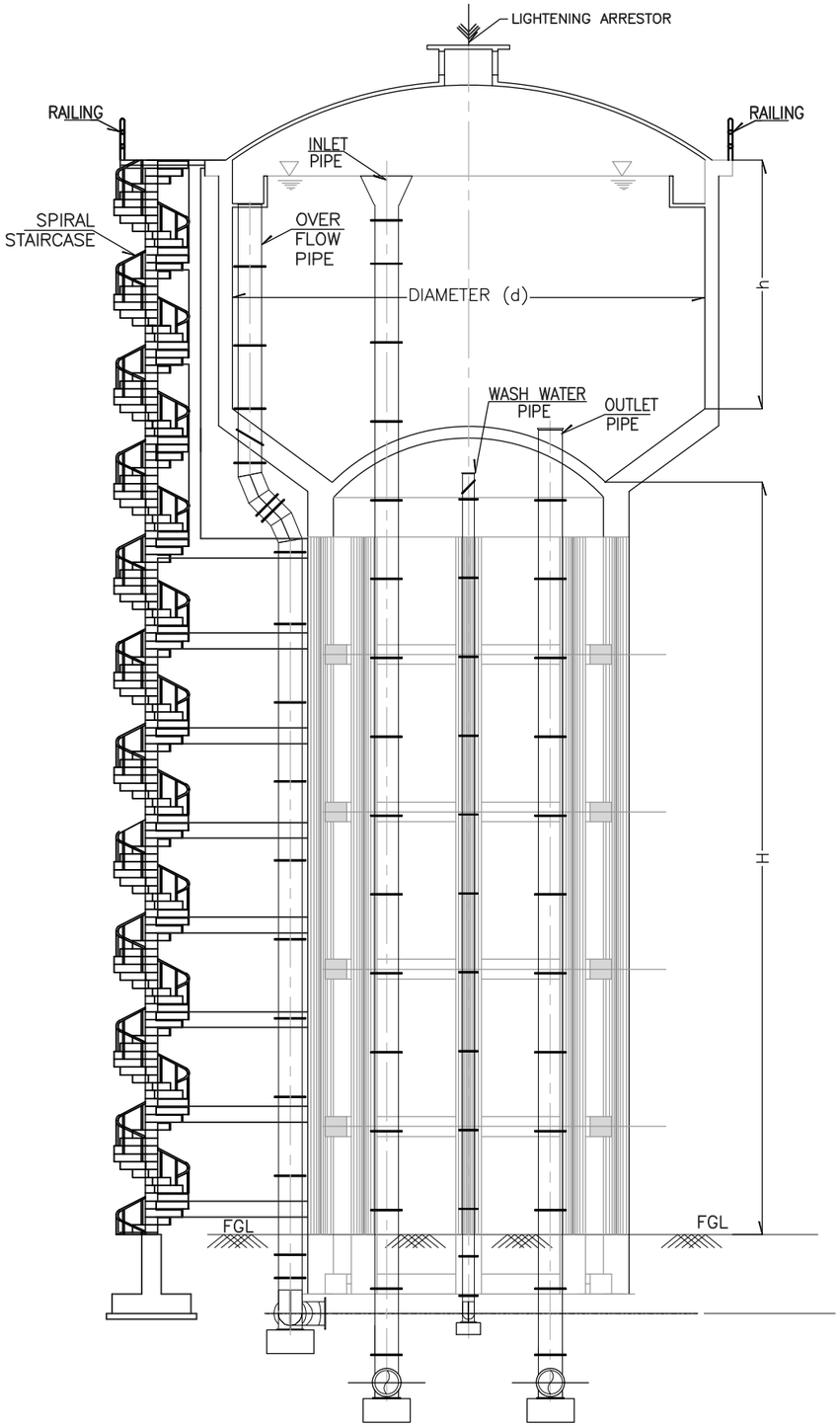

SECTION ELEVATION

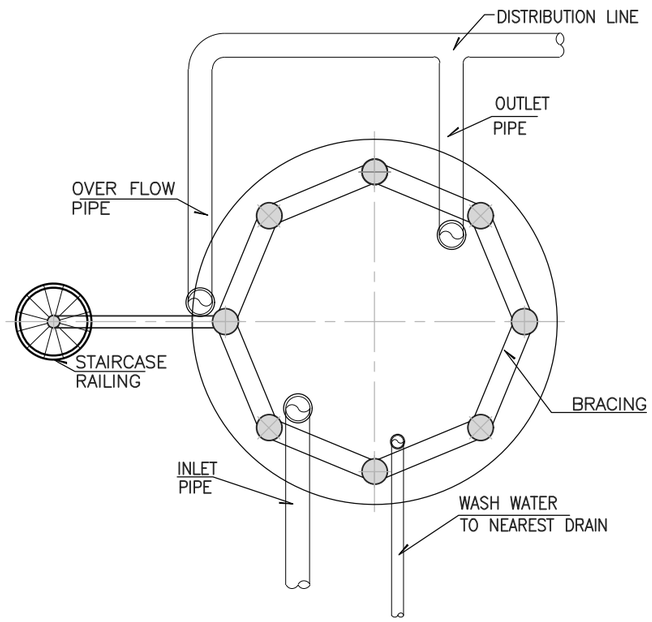

SECTIONAL PLAN

LEGEND:

D-----DIAMETER
H-----STAGE HEIGHT
h-----HEIGHT OF CYLINDRICAL WALL
FGL----FINISHED GROUND LEVEL

NOTES:

1. ALL DIMENSIONS ARE IN MILLIMETRES. ELEVATIONS ARE IN METRES UNLESS OTHERWISE NOTED.
2. ALL DIMENSIONS INDICATED ARE CLEAR INSIDE DIMENSIONS.

	SIGN.												
	INITIALS												
	REVISIONS												
PO	SIGN.												
	INITIALS	SM	LD/AD	DVP							NMS	NMS	15-04-2022
	REVISIONS												
ISSUE		DRN	DSN	CHD	CV	EL	IC	ME			PE/PM	APPD	DATE (dd-mm-yyyy)
					CLEARED								

'P' (PRELIMINARY) ISSUES ARE NOT TO BE USED FOR CONSTRUCTION / FABRICATION BUT ARE ISSUED FOR LIMITED PURPOSES ONLY AS INDICATED IN THE SMALL BLOCK ABOVE THIS BLOCK.

CONSTRUCTION / FABRICATION WORK IS PERMITTED ON 'R' (RELEASED) ISSUES ONLY.

INFORMATION CONTAINED WITHIN 'HOLD' IS NOT RELEASED FOR CONSTUCTION / FABRICATION. FIELD MUST GET DESIGN OFFICE TO CLEAR 'HOLDS' IN TIME BEFORE PROCEEDING WITH ANY CONSTRUCTION/ FABRICATION WORK RELATED TO 'HOLDS'.

SIGN. OF CLIENT:-

JE	AE	EE	SE

PURPOSE : FOR TENDER ONLY

DO NOT SCALE

Proprietary Notice and Version Control This document contains confidential information for use only by the " Client " ; for the Project under consideration, which is provided for the sole purpose of permitting the recipient to evaluate the information submitted herewith. In consideration of receipt of this document; unless agreed to in contrary in the Contract; the recipient agrees to maintain such information in confidence and to not reproduce or otherwise disclose this information to any person outside the recipient's organisation; except that there is no obligation to maintain the confidentiality of any information which was known to the recipient prior to receipt of such information from Tata Consulting Engineers Limited, or becomes publicly known through no fault of recipient, or Tata Consulting Engineers Limited, or is received without obligation of confidentiality from a third party owing no obligation of confidentiality to Tata Consulting Engineers Limited. All information given under this version over rides all and any kind of offers, assumptions, deliverables and contracts submitted verbally (and subsequently communicated in writing) or in writing or otherwise given under any and all previous version/s.

FILE NAME 12503A-CV-30591-Rev-P0

DETAILED DESIGN CONSULTANCY, HP-SHIVA (PACKAGE CS09)

IRRIGATION, HORTICULTURE, ORCHARDS AND VALUE CHAIN DEVELOPMENT

TYPICAL DETAILS OF ELSR

TATA CONSULTING ENGINEERS LIMITED

MUMBAI

SCALE : NTS	DWG NO. TCE.12503A-CV-3082-GA-30591		ISSUE P0
DC & DISC : DEL-CV			

SIZE-A3

FILE NAME: F-093-Rev-R1.DWG

TCE FORM NO. 093 R1

LEGEND:

CC-----CEMENT CONCRETE
RCC----REINFORCED CEMENT CONCRETE
LVL-----LEVEL
GL-----GROUND LEVEL

NOTES:

1. ALL DIMENSIONS AND ELEVATIONS ARE IN METRES UNLESS OTHERWISE NOTED.
2. ALL DIMENSIONS INDICATED ARE CLEAR INSIDE DIMENSIONS.

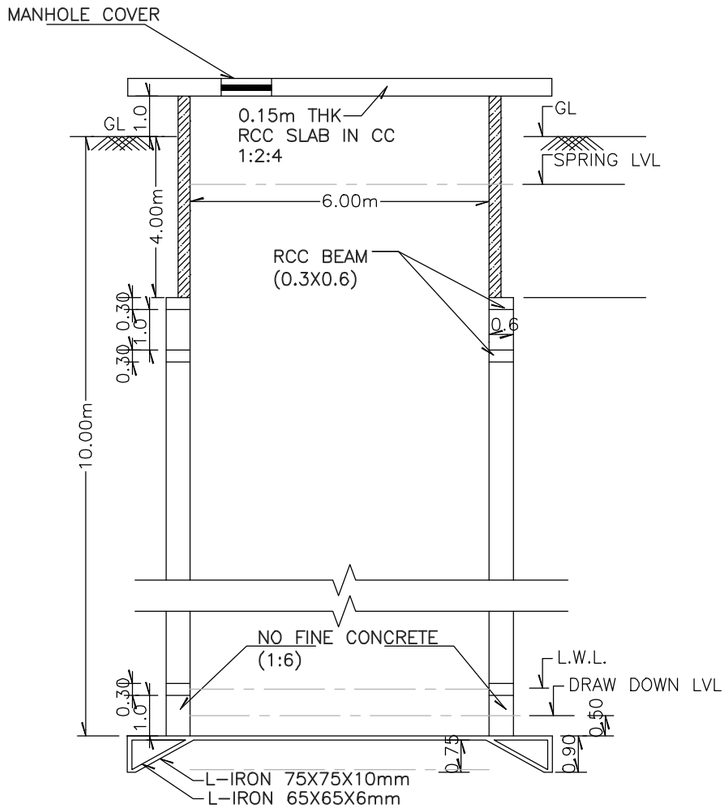

SECTION ELEVATION

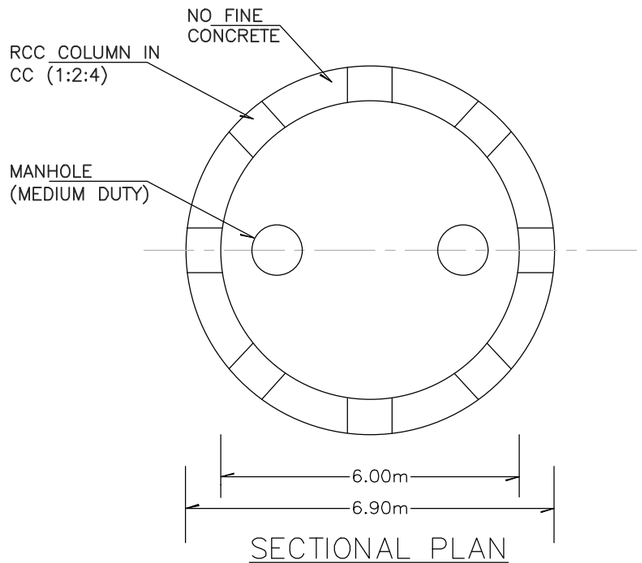

SECTIONAL PLAN

	SIGN.												
	INITIALS												
	REVISIONS												
P0	SIGN.												
	INITIALS	SM	SP	DVP							NMS	NMS	27-05-2022
	REVISIONS												
ISSUE		DRN	DSN	CHD	CV	EL	IC	ME			PE/PM	APPD	DATE (dd-mm-yyyy)
					CLEARED								

'P' (PRELIMINARY) ISSUES ARE NOT TO BE USED FOR CONSTRUCTION / FABRICATION BUT ARE ISSUED FOR LIMITED PURPOSES ONLY AS INDICATED IN THE SMALL BLOCK ABOVE THIS BLOCK.

CONSTRUCTION / FABRICATION WORK IS PERMITTED ON 'R' (RELEASED) ISSUES ONLY.

INFORMATION CONTAINED WITHIN 'HOLD' IS NOT RELEASED FOR CONSTUCTION / FABRICATION. FIELD MUST GET DESIGN OFFICE TO CLEAR 'HOLDS' IN TIME BEFORE PROCEEDING WITH ANY CONSTRUCTION/ FABRICATION WORK RELATED TO 'HOLDS'.

SIGN. OF CLIENT:-

JE	AE	EE	SE

PURPOSE : FOR TENDER ONLY

DO NOT SCALE

Proprietary Notice and Version Control This document contains confidential information for use only by the "Client"; for the Project under consideration, which is provided for the sole purpose of permitting the recipient to evaluate the information submitted herewith. In consideration of receipt of this document; unless agreed to in contrary in the Contract; the recipient agrees to maintain such information in confidence and to not reproduce or otherwise disclose this information to any person outside the recipient's organisation; except that there is no obligation to maintain the confidentiality of any information which was known to the recipient prior to receipt of such information from Tata Consulting Engineers Limited, or becomes publicly known through no fault of recipient, or Tata Consulting Engineers Limited, or is received without obligation of confidentiality from a third party owing no obligation of confidentiality to Tata Consulting Engineers Limited. All information given under this version over rides all and any kind of offers, assumptions, deliverables and contracts submitted verbally (and subsequently communicated in writing) or in writing or otherwise given under any and all previous version/s.

FILE NAME 12503A-CV-30592-Rev-P0

DETAILED DESIGN CONSULTANCY, HP-SHIVA (PACKAGE CS09)

IRRIGATION, HORTICULTURE, ORCHARDS AND VALUE CHAIN DEVELOPMENT

TYPICAL DETAILS OF PERCOLATION WELL

TATA CONSULTING ENGINEERS LIMITED

MUMBAI

SCALE : NTS	DWG NO. TCE.12503A-CV-3082-GA-30592		ISSUE P0
DC & DISC: DEL-CV			

SIZE-A3

FILE NAME: F-093-Rev-R1.DWG

TCE FORM NO. 093 R1

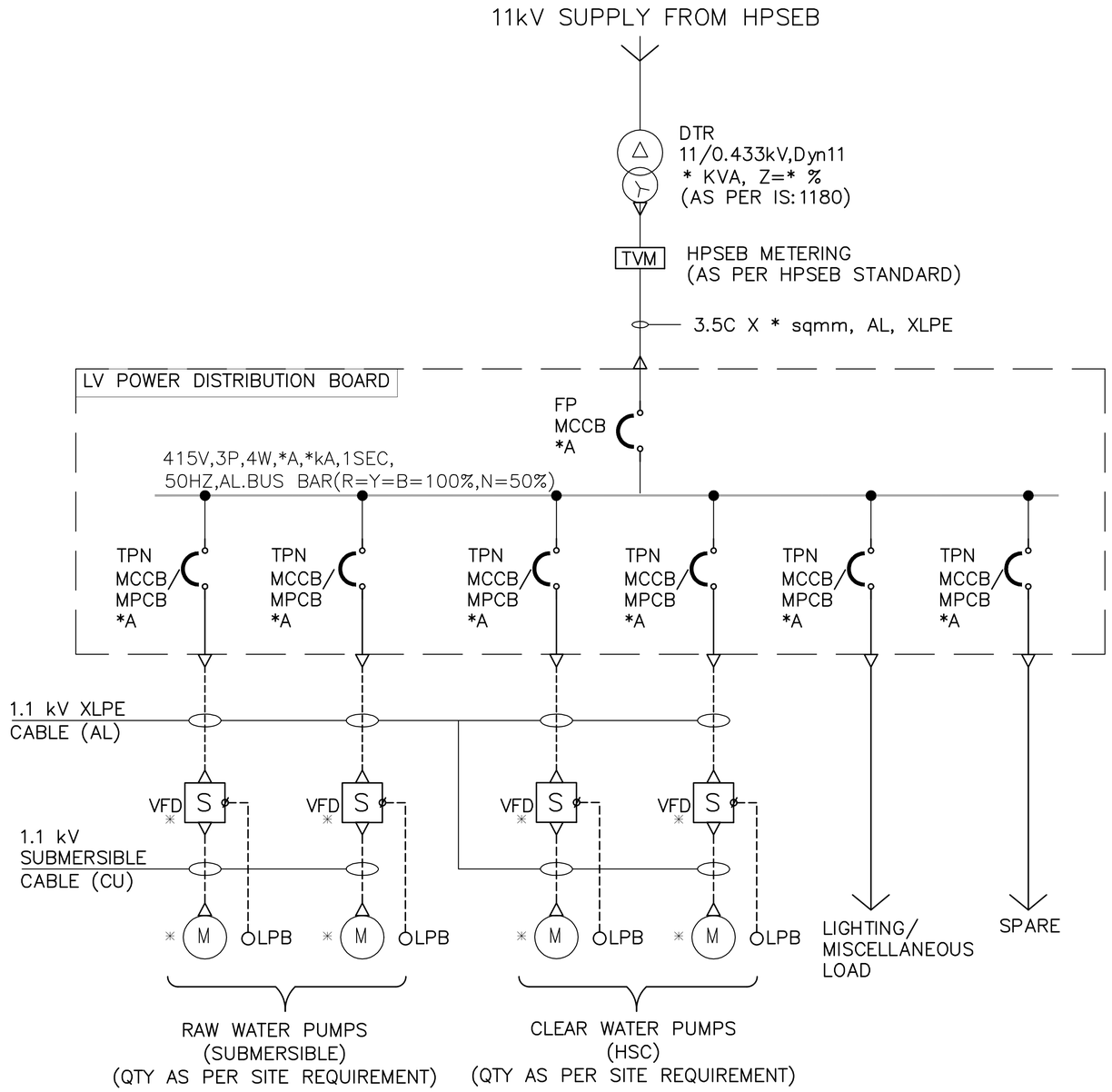

DETAILED DESIGN CONSULTANCY, HP-SHIVA (PACKAGE CS09)

IRRIGATION, HORTICULTURE, ORCHARDS AND VALUE CHAIN DEVELOPMENT

TYPICAL SLD FOR LIS PUMPING STATION WITH 1W+1S UNITS & LT METERING

SIGN. OF CLIENT:-

JE	AE	EE	SE

PURPOSE : FOR TENDER ONLY

DO NOT SCALE

	SIGN.													
	INITIALS													
	REVISIONS													
P0	SIGN.													
	INITIALS	KKS	ASB	ASB							MK	DK	18-04-2022
	REVISIONS													
ISSUE		DRN	DSN	CHD	CV	EL	IC	ME			PE/PM	APPD	DATE (dd-mm-yyyy)
					CLEARED								

'P' (PRELIMINARY) ISSUES ARE NOT TO BE USED FOR CONSTRUCTION / FABRICATION BUT ARE ISSUED FOR LIMITED PURPOSES ONLY AS INDICATED IN THE SMALL BLOCK ABOVE THIS BLOCK.

CONSTRUCTION / FABRICATION WORK IS PERMITTED ON 'R' (RELEASED) ISSUES ONLY.

INFORMATION CONTAINED WITHIN 'HOLD' IS NOT RELEASED FOR CONSTUCTION / FABRICATION. FIELD MUST GET DESIGN OFFICE TO CLEAR 'HOLDS' IN TIME BEFORE PROCEEDING WITH ANY CONSTRUCTION/ FABRICATION WORK RELATED TO 'HOLDS'.

Proprietary Notice and Version Control This document contains confidential information for use only by the ' Client ' ; for the Project under consideration, which is provided for the sole purpose of permitting the recipient to evaluate the information submitted herewith. In consideration of receipt of this document; unless agreed to in contrary in the Contract; the recipient agrees to maintain such information in confidence and to not reproduce or otherwise disclose this information to any person outside the recipient's organisation; except that there is no obligation to maintain the confidentiality of any information which was known to the recipient prior to receipt of such information from Tata Consulting Engineers Limited, or becomes publicly known through no fault of recipient, or Tata Consulting Engineers Limited, or is received without obligation of confidentiality, from a third party owing no obligation of confidentiality to Tata Consulting Engineers Limited. All information given under this version over rides all and any kind of offers, assumptions, deliverables and contracts submitted verbally (and subsequently communicated in writing) or in writing or otherwise given under any and all previous version/s.

TATA CONSULTING ENGINEERS LIMITED

MUMBAI

SCALE : NTS

DC & DISC: DEL-CV

DWG NO. TCE.12503A-EL-4002-AU-40001

ISSUE P0

SIZE-A3

FILE NAME: 12503A-EL-40001-Rev-P0

FILE NAME: F-093-Rev-R1.DWG

TCE FORM NO. 093 R1

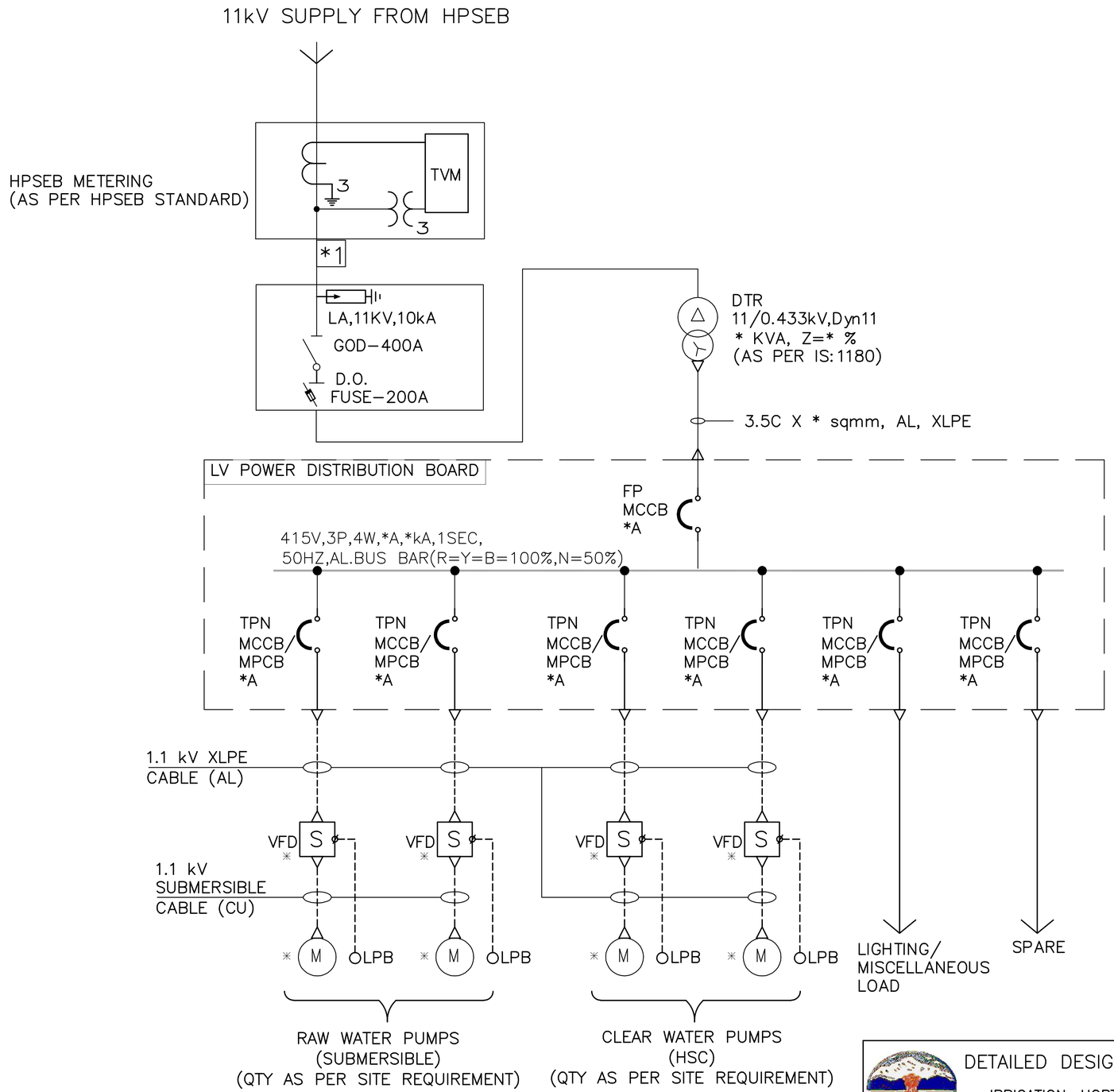

DETAILED DESIGN CONSULTANCY, HP-SHIVA (PACKAGE CS09)

IRRIGATION, HORTICULTURE, ORCHARDS AND VALUE CHAIN DEVELOPMENT

TYPICAL SLD FOR LIS PUMPING STATION WITH 1W+1S UNITS & HT METERING

SIGN. OF CLIENT:-

JE	AE	EE	SE

ISSUE		DRN	DSN	CHD	CV	EL	IC	ME			PE/PM	APPD	DATE (dd-mm-yyyy)
	SIGN.												
	INITIALS												
	REVISIONS												
P0	SIGN.												
	INITIALS	KKS	ASB	ASB							MK	DK	18-04-2022
	REVISIONS												
					CLEARED								

'P' (PRELIMINARY) ISSUES ARE NOT TO BE USED FOR CONSTRUCTION / FABRICATION BUT ARE ISSUED FOR LIMITED PURPOSES ONLY AS INDICATED IN THE SMALL BLOCK ABOVE THIS BLOCK.

CONSTRUCTION / FABRICATION WORK IS PERMITTED ON 'R' (RELEASED) ISSUES ONLY.

INFORMATION CONTAINED WITHIN 'HOLD' IS NOT RELEASED FOR CONSTUCTION / FABRICATION. FIELD MUST GET DESIGN OFFICE TO CLEAR 'HOLDS' IN TIME BEFORE PROCEEDING WITH ANY CONSTRUCTION/ FABRICATION WORK RELATED TO 'HOLDS'.

PURPOSE : FOR TENDER ONLY

DO NOT SCALE

Proprietary Notice and Version Control This document contains confidential information for use only by the " Client " ; for the Project under consideration, which is provided for the sole purpose of permitting the recipient to evaluate the information submitted herewith. In consideration of receipt of this document; unless agreed to in contrary in the Contract; the recipient agrees to maintain such information in confidence and to not reproduce or otherwise disclose this information to any person outside the recipient's organisation; except that there is no obligation to maintain the confidentiality of any information which was known to the recipient prior to receipt of such information from Tata Consulting Engineers Limited, or becomes publicly known through no fault of recipient, or Tata Consulting Engineers Limited, or is received without obligation of confidentiality from a third party owing no obligation of confidentiality to Tata Consulting Engineers Limited. All information given under this version over rides all and any kind of offers, assumptions, deliverables and contracts submitted verbally (and subsequently communicated in writing) or in writing or otherwise given under any and all previous version/s.

FILE NAME: 12503A-EL-40002-Rev-P0

TATA CONSULTING ENGINEERS LIMITED

MUMBAI

SCALE : NTS

DC & DISC: DEL-CV

DWG NO. TCE.12503A-EL-4002-AU-40002

ISSUE P0

SIZE-A3

FILE NAME: F-093-Rev-R1.DWG

TCE FORM NO. 093 R1

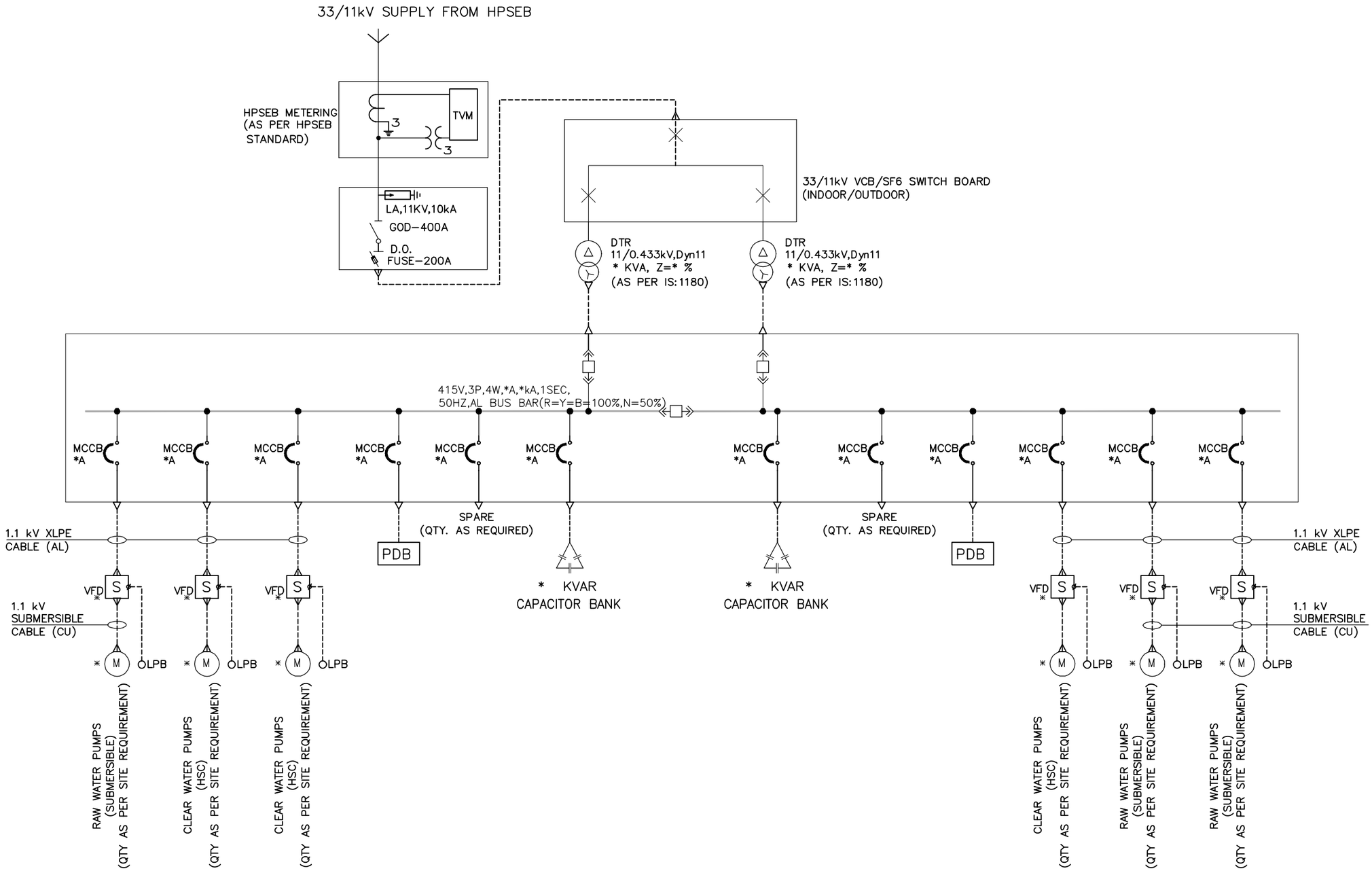

DETAILED DESIGN CONSULTANCY, HP-SHIVA (PACKAGE CS09)

IRRIGATION, HORTICULTURE, ORCHARDS AND VALUE CHAIN DEVELOPMENT

TYPICAL SLD FOR LIS PUMPING STATION WITH 2W+1S UNITS & HT METERING

SIGN. OF CLIENT:-

JE	AE	EE	SE

PURPOSE : FOR TENDER ONLY

DO NOT SCALE

	SIGN.													
	INITIALS													
	REVISIONS													
P0	SIGN.													18-04-2022
	INITIALS	KKS	ASB	ASB							MK	DK		
	REVISIONS													
ISSUE		DRN	DSN	CHD	CV	EL	IC	ME			PE/PM	APPD	DATE (dd-mm-yyyy)	
					CLEARED									

'P' (PRELIMINARY) ISSUES ARE NOT TO BE USED FOR CONSTRUCTION / FABRICATION BUT ARE ISSUED FOR LIMITED PURPOSES ONLY AS INDICATED IN THE SMALL BLOCK ABOVE THIS BLOCK.

CONSTRUCTION / FABRICATION WORK IS PERMITTED ON 'R' (RELEASED) ISSUES ONLY.

INFORMATION CONTAINED WITHIN 'HOLD' IS NOT RELEASED FOR CONSTUCTION / FABRICATION. FIELD MUST GET DESIGN OFFICE TO CLEAR 'HOLDS' IN TIME BEFORE PROCEEDING WITH ANY CONSTRUCTION/ FABRICATION WORK RELATED TO 'HOLDS'.

Proprietary Notice and Version Control This document contains confidential information for use only by the ' Client '; for the Project under consideration, which is provided for the sole purpose of permitting the recipient to evaluate the information submitted herewith. In consideration of receipt of this document; unless agreed to in contrary in the Contract; the recipient agrees to maintain such information in confidence and to not reproduce or otherwise disclose this information to any person outside the recipient's organization; except that there is no obligation to maintain the confidentiality of any information which was known to the recipient prior to receipt of such information from Tata Consulting Engineers Limited, or becomes publicly known through no fault of recipient, or Tata Consulting Engineers Limited, or is received without obligation of confidentiality from a third party owing no obligation of confidentiality to Tata Consulting Engineers Limited. All information given under this version over rides all and any kind of offers, assumptions, deliverables and contracts submitted verbally (and subsequently communicated in writing) or in writing or otherwise given under any and all previous version/s.

FILE NAME: 12503A-EL-40003-Rev-P0

TATA CONSULTING ENGINEERS LIMITED

MUMBAI

SCALE : NTS	DWG NO. TCE.12503A-EL-4002-AU-40003	ISSUE P0
DC & DISC: DEL-CV		

SIZE-A3

FILE NAME: F-093-Rev-R1.DWG

TCE FORM NO. 093 R1

GENERAL NOTES:

1. THIS SLD SHOWS THE SCHEME FOR DISTRIBUTION OF THE POWER WITHIN THE PROJECT BATTERY LIMIT & SHALL be READ IN CONJUNCTION WITH ALL OTHER RELEVANT DRGS. RATINGS, SIZES & QUANTITIES OF EQUIPMENTS MARKED AS '*' NEED TO BE CALCULATED / PROVIDED BASED ON SYSTEM REQUIREMENT AS TENDER SPECIFICATIONS. CONTRACTOR SHALL SUBMIT THE EQUIPMENT SIZING CALCULATIONS & CORRESPONDING SWITCH GEAR RATING ALONG WITH THE BID.

2. THE CONTRACTOR HAS TO DO DETAIL ENGINEERING OF HV & LV SYSTEM AND WORK OUT THE RATING OF EACH COMPONENT AS PER DESIGN CRITERIA GIVEN IN TENDER & EQUIPMENT SIZING CALCULATIONS AS APPROVED BY ENGINEER–IN –CHARGE.

3. HV SYSTEM:
a) INTER TRIPPING & CLOSING INTERLOCK SHALL BE PROVIDED BETWEEN TRANSFORMER FEEDER (11KV) AND LT PANEL INCOMER (0.415KV) SIDE.
b) CT /PT UNIT FOR HT METERING AND TVM SHALL BE AS PER DISCOM.

4. LV SYSTEM:
a) ACB
– 415V SWITCHBOARD INCOMER/ BUS COUPLER ACB SHALL BE FP, EDO TYPE WITH MICROPROCESSOR–BASED O/C, S/C & INBUILT E/F AND UV RELEASES.
– ALL OUTGOING ACBS SHALL BE TP, EDO TYPE WITH MICROPROCESSOR–BASED O/C, S/C & INBUILT E/F RELEASES EXCEPT FOR APFC WHICH SHALL BE MDO TYPE WITH THERMAL MAGNETIC RELEASES.
– IN ALL LT SWITCHBOARDS, CURRENT RATING ABOVE 630A SHALL HAVE ACBs.
– –ALL ACBS SHALL BE WITH ICS=ICU=ICW=100%.
b) MCCB
– 415V SWITCHBOARD INCOMER/ BUSCOUPLER MCCB (>=250A) SHALL BE FP FIXED TYPE WITH MICROPROCESSOR BASED O/C, S/C & E/F RELEASES AND OUTGOING MCCB (>=250A) SHALL BE TP FIXED TYPE WITH MICROPROCESSOR BASED O/C, S/C & E/F RELEASES EXCEPT FOR APFC AND WHICH SHALL HAVE TM BASED O/C, S/C & E/F RELEASES WITH EXTERNAL E/F MODULE. ALL INCOMER/ OUTGOING MCCB (<250A) SHALL HAVE TM BASED O/C, S/C & E/F RELEASES WITH EXTERNAL E/F MODULE.
– ALL MCCB SHALL BE WITH Ics=Icu=100%.

5. ALL INDICATIONS, SHUNT TRIP/CLOSING COILS OF HT/ LT BREAKERS (VCBS/ ACBS) WILL BE ON 30/110V DC CONTROL SUPPLY. SPRING CHARGING MOTORS OF ALL BREAKERS WILL BE ON 230V AC SUPPLY. IF, DC SUPPLY IS NOT AVAILABLE FROM EXTERNAL SOURCE, IT SHALL BE DERIVED FROM INBUILT DC POWER PACK SUITABLE FOR ACCEPTING 230V AC SUPPLY FROM EXTERNAL SOURCE.
6. IN MCC, ALL MOTOR STARTER COMPONENTS RATING SHALL BE SELECTED AS PER MANUFACTURER'S TYPE–2 CO–ORDINATION CHART. MOTOR STARTERS SHALL BE COMPLETE WITH SINGLE PHASING PREVENTER. AMMETERS IN MOTOR FEEDERS SHALL BE PROVIDED WITH SUPPRESSED SCALE UP TO 6 TIMES FULL LOAD CURRENT FOR INDICATING STARTING CURRENT. ALL MOTOR FEEDERS UP TO OR EQUAL TO 5.5 KW SHALL HAVE DIRECT CONNECTED AMMETERS IN Y PHASE & MOTORS GREATER THAN 5.5KW WILL BE PROVIDED WITH ONE CT & AMMETER.

7. THE ON, OFF AND TRIP POSITION OF MCCB/ MPCB SHALL BE CLEARLY INDICATED. ROTARY OPERATING HANDLE FOR MCCBs/ MPCBs WITH THE DOOR CLOSED INTERLOCK SHALL BE PROVIDED. ALL MCCB/ MPCB FEEDERS ON ALL PANELS SHALL BE PROVIDED WITH ON/OFF/TRIP INDICATING LAMPS THROUGH AUXILIARY CONTACTS. WHEREVER STARTER FEEDER PROVIDED WITH MPCB BUT WITHOUT OVERLOAD RELAY, MPCB SHALL HAVE INBUILT OVERLOAD PROTECTION FEATURE.

8. 110 OR 220V AC CONTROL SUPPLY FOR LT PCC/ MCC SHALL BE DERIVED FROM CONTROL TRANSFORMER(S) OF ADEQUATE RATING. INTERLOCKING BETWEEN TWO CONTROL SUPPLIES SHALL BE PROVIDED SUCH THAT ENERGIZED SECTION CATERS FOR THE NEED OF THE PCC/ MCC PANEL.

9. MCCB & MPCB TERMINALS SHALL BE SHROUDED AND SHALL BE DESIGNED TO RECEIVE CABLE LUGS FOR RELEVANT CABLE SIZES.

10. ALL INDICATING LAMPS SHALL BE MULTICHIP LED TYPE.

11. MULTIFUNCTION METER FOR MEASURING ALL POWER & ENERGY PARAMETERS SHALL HAVE AN ACCURACY CLASS OF 1.0 OR BETTER, WITH RS 485 COMM PORT.

12. ALL CONTACTORS / TIMERS SHALL BE DIN RAIL MOUNTED.

13. UNDER STEADY STATE CONDITIONS, VOLTAGE DROP IN VARIOUS SECTIONS OF ELECTRICAL SYSTEM SHALL BE LIMITED TO A) CABLES BETWEEN TRANSFORMER SECONDARY TO PMCC – 2 % AND B) CABLES BETWEEN PMCC TO MOTOR– 3%. UNDER MOTOR STARTING CONDITIONS, THE CORRESPONDING VOLTAGE DROP SHALL NOT AFFECT THE OPERATION OF THE MOTOR CONTROLS OR THE ABILITY OF THE MOTOR TO START AND RUN EFFECTIVELY AND IN ANY EVENT SHALL NOT EXCEED 15%. FAULT CLEARING TIME TO BE CONSIDERED WHILE SIZING OF CABLES SHALL BE AS A) PCC INCOMER – 1 SEC AND B) TRANSFORMER PRIMARY: 0.16 SEC.

14. UNLESS SPECIFIED, ALL SWITCHBOARDS SHALL BE FREE STANDING, COMPARTMENTALIZED, EXTENSIBLE ON BOTH SIDES WITH HEIGHT NOT EXCEEDING 2300MM. ENCLOSURE PROTECTION OF SWITCHBOARDS SHALL BE AS PER TENDER.

15. WHEREVER APPLICABLE, SEPARATE PANEL FOR HVAC, FIRE AND PLUMPING PUMP WILL BE PART OF RESPECTIVE BOQ.

16. WHEREVER APPLICABLE, PROVISION OF ONE–WAY NET METERING SHALL BE PROPOSED IN THE SLD FOR INTEGRATION OF THE SOLAR WITH THE DISTRIBUTION SYSTEM. THIS METHODOLOGY NEEDS TO BE VERIFIED WITH THE STATE ELECTRICITY BOARD AND THE SOLAR VENDORS. SOLAR POWER SUPPLY WILL NOT BE ON WHEN DG IS ON.

17. WHEN TWO DG'S ARE OPERATING IN PARALLEL THEN PROVISION OF NEUTRAL CONTRACTOR INTERLOCKING SHOULD BE SUCH THAT ONLY ONE DG WILL BE EARTHED.

18. MCB USED FOR STANDARD NETWORK SHALL HAVE 'C' CHARACTERISTIC CURVE.

19. EACH TYPE & RATING OF OUTGOING FEEDER SHALL HAVE 10% SPARE OR MINIMUM ONE NUMBER.

LEGEND:

	LIGHTNING ARRESTER	R	RELAYING
	ISOLATER WITH EARTH SWITCH	I	INSTRUMENTATION
	ISOLATER WITH D.O. FUSE	25	SYNCHRONIZING RELAY
		27/59	UNDER/OVER VOLTAGE RELAY
	CIRCUIT BREAKER(ACB/VCB) DRAW–OUT TYPE	81	UNDERFREQUENCY RELAY
		50	INST. O/C PROTECTION
	CIRCUIT BREAKER(ACB/VCB) NON DRAW–OUT TYPE	50N	INST. E/F PROTECTION
		51	IDMT. O/C PROTECTION
	MCCB	95	TRIP SUPERVISION RELAY
	MPCB	49W	WINDING TEMP. HIGH INDICATOR WITH ALARM & TRIP CONTACTS
	MCB	49O	OIL TEMP. HIGH INDICATOR WITH ALARM & TRIP CONTACTS
	CABLE GLAND	63 X	PRESSURE RELIEF DEVICE
	INDICATING LAMP	63 T	BUCHHOLZ RELAY
	PUSH BUTTON	OSR	OIL SURGE RELAY
	CURRENT TRANSFORMER (CT) (FIGURE INDICATES NO. OF CT's)	MOG	MAGNETIC OIL GAUGE
		86	LOCK OUT RELAY
	POTENTIAL TRANSFORMER	SC	SPRING CHARGED
		TCH	TRIP CIRCUIT HEALTHY
	TRANSFORMER	SP	SERVICE POSITION
		TP	TEST POSITION
TVM	TRI VECTOR METER		ELECTRICAL CABINET
	CHOKE	MFM	MULTIFUNCTION METER
AS	AMMETER SELECTOR SWITCH		
A	ANALOG AMMETER	NET METER	NET ENERGY METER
VS	VOLTMETER SELECTOR SWITCH		
V	ANALOG VOLTMETER	TNC	TRIP–NEUTRAL–CLOSE SWITCH (KEY OPERATED)
	PUSH BUTTON STATION		
E.M.I.	ELECTRICAL– MECHANICAL INTERLOCK	ETPB	EMERGENCY TRIP PUSH BUTTON
R G A	TWO MOMENTARY CONTACT PB WITH THREE INDICATING LAMPS (R = RED, G = GREEN, A = AMBER)		CONTACTOR
		NC	NORMALLY CLOSED
L–R	LOCAL REMOTE SELECTOR SWITCH	NO	NORMALLY OPEN

DETAILED DESIGN CONSULTANCY, HP–SHIVA (PACKAGE CS09)

IRRIGATION, HORTICULTURE, ORCHARDS AND VALUE CHAIN DEVELOPMENT

TYPICAL SLD FOR LIS PUMPING STATION WITH LT/HT METERING

GENERAL NOTES & LEGENDS

SIGN. OF CLIENT:–

JE	AE	EE	SE

	SIGN.												
	INITIALS												
	REVISIONS												
P0	SIGN.												
	INITIALS	KKS	ASB	ASB							MK	DK	18–04–2022
	REVISIONS												
ISSUE		DRN	DSN	CHD	CV	EL	IC	ME			PE/PM	APPD	DATE (dd–mm–yyyy)
					CLEARED								

'P' (PRELIMINARY) ISSUES ARE NOT TO BE USED FOR CONSTRUCTION / FABRICATION BUT ARE ISSUED FOR LIMITED PURPOSES ONLY AS INDICATED IN THE SMALL BLOCK ABOVE THIS BLOCK.

CONSTRUCTION / FABRICATION WORK IS PERMITTED ON 'R' (RELEASED) ISSUES ONLY.

INFORMATION CONTAINED WITHIN 'HOLD' IS NOT RELEASED FOR CONSTUCTION / FABRICATION. FIELD MUST GET DESIGN OFFICE TO CLEAR 'HOLDS' IN TIME BEFORE PROCEEDING WITH ANY CONSTRUCTION/ FABRICATION WORK RELATED TO 'HOLDS'.

PURPOSE : FOR TENDER ONLY

DO NOT SCALE

Proprietary Notice and Version Control This document contains confidential information for use only by the : Client " ; for the Project under consideration, which is provided for the sole purpose of permitting the recipient to evaluate the information submitted herewith. In consideration of receipt of this document; unless agreed to in contrary in the Contract; the recipient agrees to maintain such information in confidence and to not reproduce or otherwise disclose this information to any person outside the recipient's organisation; except that there is no obligation to maintain the confidentiality of any information which was known to the recipient prior to receipt of such information from Tata Consulting Engineers Limited, or becomes publicly known through no fault of recipient, or Tata Consulting Engineers Limited, or is received without obligation of confidentiality from a third party owing no obligation of confidentiality to Tata Consulting Engineers Limited. All information given under this version over rides all and any kind of offers, assumptions, deliverables and contracts submitted verbally (and subsequently communicated in writing) or in writing or otherwise given under any and all previous version/s.

FILE NAME: 12503A–EL–40004–Rev–P0

TATA CONSULTING ENGINEERS LIMITED

MUMBAI

SCALE : NTS	DWG NO. TCE.12503A–EL–4002–AU–40004	ISSUE P0
DC & DISC : DEL–CV		

SIZE–A3

FILE NAME: F–093–Rev–R1.DWG

TCE FORM NO. 093 R1